CROWN CASTLE

2000 Corporate Drive
Canonsburg, PA 15317

Phone: (314) 513-0145
Email:
Darci.Grimmer@crowncastle.com
www.crowncastle.com

February 19, 2025

VIA email
angel@hallrosenberg.com

CITY OF LAUDERHILL
5581 W OAKLAND PK BLVD
5605 GLENRIDGE DR SUITE 775
LAUDERHILL, FL 33313

Re: BU 812072 / "DXZW" / 5455 NW 19th St., Lauderhill, FL 33313 ("Site")
Lease Agreement, dated February 8, 1999, as it may have been amended and assigned ("Lease")
Consent for modifications

Dear City of Lauderhill Manager,

In order to better serve the public and minimize the amount of towers in an area where this property is located, Verizon Wireless intends to modify its equipment at the wireless communication facility (the "Modification"). *This project entails replacing antennas on tower and replacing ground equipment. All work will be performed within the exisitng lease area/compound.*

Under the Lease, Landlord's consent cannot be unreasonably withheld, conditioned or delayed. Please provide your consent **on or before April 22, 2025** by signing below and returning to Darci.Grimmer@crowncastle.com so that we may install Verizon Wireless's equipment as permitted under the Lease.

Please see the enclosed supplemental materials, as may be required by the Lease. If you have any questions concerning this request, please contact Darci Grimmer at (314) 513-0145 or Darci.Grimmer@crowncastle.com

Sincerely,

Darci Grimmer

Darci Grimmer
Real Estate Specialist III

Agreed and accepted _____
(Date)

_____
(Lessor's signature)

_____
(Lessor's name and title)

Enclosures: Drawings

verizon

VERIZON SITE NUMBER: 5000382147
VERIZON SITE NAME: BELLSOUTH LAUDERHILL
VERIZON PROJECT: 17332603
SITE TYPE: MONOPOLE
TOWER HEIGHT: 126'-0"

BUSINESS UNIT #: 812072
SITE ADDRESS: 5455 NW 19TH ST. LAUDERHILL, FL 33313
COUNTY: BROWARD
JURISDICTION: CITY OF LAUDERHILL

verizon

CROWN CASTLE

VERIZON SITE NUMBER:
5000382147

BU #: **812072**

CROWN CASTLE SITE NAME
DXZW

5455 NW 19TH ST.
LAUDERHILL, FL 33313

EXISTING 126'-0"
MONOPOLE

SITE INFORMATION

CROWN CASTLE USA INC.	
SITE NAME:	DXZW
BU NUMBER:	812072
TOWER OWNER:	CROWN CASTLE 2000 CORPORATE DRIVE CANONSBURG, PA 15317
CARRIER/APPLICANT:	VERIZON WIRELESS 7701 E TELECOM PARKWAY TEMPLE TERRACE, FL 33637
SITE ADDRESS:	5455 NW 19TH ST. LAUDERHILL, FL 33313
COUNTY:	BROWARD
LATITUDE:	26° 09' 09.60" / 26.152667°
LONGITUDE:	-80° 13' 12.10" / -80.220028°
LAT/LONG TYPE:	NAD83
GROUND ELEVATION:	8'
AREA OF CONSTRUCTION:	EXISTING
CURRENT ZONING:	## NOT FOUND ##
MAP/PARCEL #:	494126000013
OCCUPANCY CLASSIFICATION:	U
TYPE OF CONSTRUCTION:	IIB
A.D.A. COMPLIANCE:	FACILITY IS UNMANNED AND NOT FOR HUMAN HABITATION
PROPERTY OWNER:	CITY OF LAUDERHILL 5581 W OAKLAND PK BLVD LAUDERHILL, FL 33313
JURISDICTION:	CITY OF LAUDERHILL 5581 W. OAKLAND PARK BLVD LAUDERHILL, FL 33313
ELECTRIC PROVIDER:	FP&L (800) 468-4243
TELCO PROVIDER:	FIBER LIGHT

PROJECT TEAM

A&E FIRM:	CROWN CASTLE USA INC. 2000 CORPORATE DRIVE CANONSBURG, PA 15317
CROWN CASTLE	2000 CORPORATE DRIVE CANONSBURG, PA 15317
CONTACTS:	DEREK SMITH - PROJECT MANAGER DEREK.SMITH@CROWNCASTLE.COM
	SUSAN PALM - AES SUSAN.PALM@CROWNCASTLE.COM

NOTE:
PRIOR TO ACCESSING/ENTERING THE SITE YOU MUST CONTACT THE CROWN NOC AT (800) 788-7011 & CROWN CONSTRUCTION MANAGER

DRAWING INDEX

ALL DRAWINGS CONTAINED HEREIN ARE FORMATTED FOR 11X17. CONTRACTOR SHALL VERIFY ALL PLANS AND EXISTING DIMENSIONS AND CONDITIONS ON THE JOB SITE AND SHALL IMMEDIATELY NOTIFY THE ENGINEER IN WRITING OF ANY DISCREPANCIES BEFORE PROCEEDING WITH THE WORK OR BE RESPONSIBLE FOR SAME.

CALL FLORIDA ONE CALL
(800) 432-4770
CALL 3 WORKING DAYS
BEFORE YOU DIG!

811

CONTRACTOR PMI REQUIREMENTS

PMI ACCESSED AT	https://pmi.vzwsmart.com
SMART TOOL VENDOR PROJECT NUMBER	10247406
VzW LOCATION CODE (PSLC)	131681

*** PMI AND REQUIREMENTS ALSO EMBEDDED IN MOUNT ANALYSIS REPORT

MOUNT MODIFICATION REQUIRED	Y

VzW APPROVED SMART KIT VENDORS

REFER TO MOUNT MODIFICATION DRAWINGS PAGE FOR VzW SMART KIT APPROVED VENDORS

APPROVALS

VERIZON SIGNATURE BLOCK

APPROVAL	SIGNATURE	DATE
SITE ACQUISITION		
CONSTRUCTION		
RADIO		
MICROWAVE		
TELCO		
EQUIPMENT		
PROJECT ADMINISTRATOR		
WO ADMINISTRATOR		

CROWN CASTLE USA INC. SINGNATURE BLOCK

APPROVAL		
SITE ACQUISITION		
PLANNER		
CONSTRUCTION		
PROJECT MANAGER		
UTILITY MANAGER		
LANDLORD		

LOCATION MAP

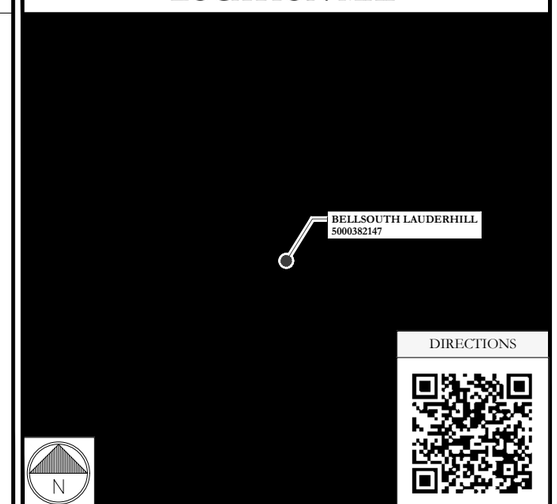

DIRECTIONS

NO SCALE

PROJECT DESCRIPTION

THE PURPOSE OF THIS PROJECT IS TO ENHANCE BROADBAND CONNECTIVITY AND CAPACITY TO THE EXISTING ELIGIBLE WIRELESS FACILITY.

TOWER SCOPE OF WORK:
- REMOVE (3) ERICSSON - AIR6449 ANTENNAS
- REMOVE (6) CSS ANTENNA - X7CQAP-86-865-VR0 ANTENNAS
- REMOVE (3) ERICSSON - 4449 RADIOS
- REMOVE (3) ERICSSON - 8843 RADIOS
- INSTALL MOUNT MODIFICATION BY COLLIERS ENGINEERING & DESIGN DATED 8/13/25
- INSTALL (1) MATSING - MS-MBA-3.2-H8-L4 ANTENNA
- INSTALL (3) ERICSSON - AIR6419 ANTENNAS
- INSTALL (4) COMMSCOPE - NHH-65B-HG-R2B ANTENNAS
- INSTALL (2) ERICSSON - AIR 3283 ANTENNAS
- INSTALL (4) ERICSSON - 4490 RADIOS
- INSTALL (3) ERICSSON - 4890 RADIOS

GROUND SCOPE OF WORK:
- REMOVE 3 BATTERY STRINGS OF PYL 12 185' UNDER POWER PLANT
- INSTALL 2V -48V BATTERY SYSTEM

INSTALLER NOTE:

NO PROPOSED LOADING TO BE ADDED UNTIL MOUNT MODIFICATIONS ARE INSTALLED PER MOUNT ANALYSIS BY COLLIERS ENGINEERING & DESIGN DATED 08/13/2024.

APPLICABLE CODES & REFERENCE DOCUMENTS

ALL WORK SHALL BE PERFORMED AND MATERIALS INSTALLED IN ACCORDANCE WITH THE CURRENT EDITIONS OF THE FOLLOWING CODES AS ADOPTED BY THE LOCAL GOVERNING AUTHORITIES. NOTHING IN THESE PLANS IS TO BE CONSTRUED TO PERMIT WORK NOT CONFORMING TO THESE CODES:

CODE TYPE	CODE
BUILDING	2023 FLORIDA BUILDING CODE 8TH EDITION/2021 IBC
MECHANICAL	2023 FLORIDA BUILDING CODE 8TH EDITION/2021 IMC
ELECTRICAL	2023 FLORIDA BUILDING CODE 8TH EDITION/2020 NEC

SITE DESIGN CRITERIA:
APPLICABLE CODES: TIA-222-H / ASCE 7-16
WIND SPEED: V = 170 MPH (ULTIMATE 3 SECOND GUST)
EXPOSURE CATEGORY: C
RISK CATEGORY: II
TOPOGRAPHIC CATEGORY: 1
CREST HEIGHT: 0
K_{zt}=1.0
SEISMIC RESPONSE: NA

REFERENCE DOCUMENTS:

STRUCTURAL ANALYSIS:	B+T GROUP
DATED:	12/12/24
MOUNT ANALYSIS:	COLLIERS ENGINEERING & DESIGN
DATED:	08/13/2024
RFDS REVISION:	----
DATED:	07/22/2024
ORDER ID:	677901
REVISION:	0

ISSUED FOR:

REV	DATE	DRWN	DESCRIPTION	DES./QA
0	1/15/25	LAW	CONSTRUCTION	MD

Signed by:
Marshal Dudinger
01434115468548C2...

MARSHAL DUDINGER
LICENSE
No. 57890
STATE OF
FLORIDA
PROFESSIONAL ENGINEER

1/21/2025 | 6:45:43 AM CST
1/15/25

CROWN CASTLE USA INC.
PROFESSIONAL ENGINEER LICENSE: #57890
COA #28970

IT IS A VIOLATION OF LAW FOR ANY PERSON, UNLESS THEY ARE ACTING UNDER THE DIRECTION OF A LICENSED PROFESSIONAL ENGINEER, TO ALTER THIS DOCUMENT.

SHEET NUMBER:	REVISION:
T-1	0

CROWN CASTLE USA INC. SITE ACTIVITY REQUIREMENTS:

1. NOTICE TO PROCEED– NO WORK SHALL COMMENCE PRIOR TO CROWN CASTLE USA INC. WRITTEN NOTICE TO PROCEED (NTP) AND THE ISSUANCE OF A PURCHASE ORDER. PRIOR TO ACCESSING/ENTERING THE SITE YOU MUST CONTACT THE CROWN CASTLE USA INC. NOC AT 800–788–7011 & THE CROWN CASTLE USA INC. CONSTRUCTION MANAGER.
2. "LOOK UP" – CROWN CASTLE USA INC. SAFETY CLIMB REQUIREMENT: THE INTEGRITY OF THE SAFETY CLIMB AND ALL COMPONENTS OF THE CLIMBING FACILITY SHALL BE CONSIDERED DURING ALL STAGES OF DESIGN, INSTALLATION, AND INSPECTION. TOWER MODIFICATION, MOUNT REINFORCEMENTS, AND/OR EQUIPMENT INSTALLATIONS SHALL NOT COMPROMISE THE INTEGRITY OR FUNCTIONAL USE OF THE SAFETY CLIMB OR ANY COMPONENTS OF THE CLIMBING FACILITY ON THE STRUCTURE. THIS SHALL INCLUDE, BUT NOT BE LIMITED TO: PINCHING OF THE WIRE ROPE, BENDING OF THE WIRE ROPE FROM ITS SUPPORTS, DIRECT CONTACT OR CLOSE PROXIMITY TO THE WIRE ROPE WHICH MAY CAUSE FRICTIONAL WEAR, IMPACT TO THE ANCHORAGE POINTS IN ANY WAY, OR TO IMPEDE/BLOCK ITS INTENDED USE. ANY COMPROMISED SAFETY CLIMB, INCLUDING EXISTING CONDITIONS MUST BE TAGGED OUT AND REPORTED TO YOUR CROWN CASTLE USA INC. POC OR CALL THE NOC TO GENERATE A SAFETY CLIMB MAINTENANCE AND CONTRACTOR NOTICE TICKET.
3. PRIOR TO THE START OF CONSTRUCTION, ALL REQUIRED JURISDICTIONAL PERMITS SHALL BE OBTAINED. THIS INCLUDES, BUT IS NOT LIMITED TO, BUILDING, ELECTRICAL, MECHANICAL, FIRE, FLOOD ZONE, ENVIRONMENTAL, AND ZONING. AFTER ONSITE ACTIVITIES AND CONSTRUCTION ARE COMPLETED, ALL REQUIRED PERMITS SHALL BE SATISFIED AND CLOSED OUT ACCORDING TO LOCAL JURISDICTIONAL REQUIREMENTS.
4. ALL CONSTRUCTION MEANS AND METHODS; INCLUDING BUT NOT LIMITED TO, ERECTION PLANS, RIGGING PLANS, CLIMBING PLANS, AND RESCUE PLANS SHALL BE THE RESPONSIBILITY OF THE GENERAL CONTRACTOR RESPONSIBLE FOR THE EXECUTION OF THE WORK CONTAINED HEREIN, AND SHALL MEET ANSI/ASSE A10.48 (LATEST EDITION); FEDERAL, STATE, AND LOCAL REGULATIONS; AND ANY APPLICABLE INDUSTRY CONSENSUS STANDARDS RELATED TO THE CONSTRUCTION ACTIVITIES BEING PERFORMED. ALL RIGGING PLANS SHALL ADHERE TO ANSI/ASSE A10.48 (LATEST EDITION) AND CROWN CASTLE USA INC. STANDARD CED–STD–10253, INCLUDING THE REQUIRED INVOLVEMENT OF A QUALIFIED ENGINEER FOR CLASS IV CONSTRUCTION, TO CERTIFY THE SUPPORTING STRUCTURE(S) IN ACCORDANCE WITH ANSI/TIA–322 (LATEST EDITION).
5. ALL SITE WORK TO COMPLY WITH QAS–STD–10068 "INSTALLATION STANDARDS FOR CONSTRUCTION ACTIVITIES ON CROWN CASTLE USA INC. TOWER SITE," CED–STD–10294 "STANDARD FOR INSTALLATION OF MOUNTS AND APPURTENANCES," AND LATEST VERSION OF ANSI/TIA–1019–A–2012 "STANDARD FOR INSTALLATION, ALTERATION, AND MAINTENANCE OF ANTENNA SUPPORTING STRUCTURES AND ANTENNAS."
6. IF THE SPECIFIED EQUIPMENT CAN NOT BE INSTALLED AS SHOWN ON THESE DRAWINGS, THE CONTRACTOR SHALL PROPOSE AN ALTERNATIVE INSTALLATION FOR APPROVAL BY CROWN CASTLE USA INC. PRIOR TO PROCEEDING WITH ANY SUCH CHANGE OF INSTALLATION.
7. ALL MATERIALS FURNISHED AND INSTALLED SHALL BE IN STRICT ACCORDANCE WITH ALL APPLICABLE CODES, REGULATIONS AND ORDINANCES. CONTRACTOR SHALL ISSUE ALL APPROPRIATE NOTICES AND COMPLY WITH ALL LAWS, ORDINANCES, RULES, REGULATIONS AND LAWFUL ORDERS OF ANY PUBLIC AUTHORITY REGARDING THE PERFORMANCE OF THE WORK. ALL WORK CARRIED OUT SHALL COMPLY WITH ALL APPLICABLE MUNICIPAL AND UTILITY COMPANY SPECIFICATIONS AND LOCAL JURISDICTIONAL CODES, ORDINANCES AND APPLICABLE REGULATIONS.
8. THE CONTRACTOR SHALL INSTALL ALL EQUIPMENT AND MATERIALS IN ACCORDANCE WITH MANUFACTURER'S RECOMMENDATIONS UNLESS SPECIFICALLY STATED OTHERWISE.
9. THE CONTRACTOR SHALL CONTACT UTILITY LOCATING SERVICES PRIOR TO THE START OF CONSTRUCTION.
10. ALL EXISTING ACTIVE SEWER, WATER, GAS, ELECTRIC AND OTHER UTILITIES WHERE ENCOUNTERED IN THE WORK, SHALL BE PROTECTED AT ALL TIMES AND WHERE REQUIRED FOR THE PROPER EXECUTION OF THE WORK, SHALL BE RELOCATED AS DIRECTED BY CONTRACTOR. EXTREME CAUTION SHOULD BE USED BY THE CONTRACTOR WHEN EXCAVATING OR DRILLING PIERS AROUND OR NEAR UTILITIES. CONTRACTOR SHALL PROVIDE SAFETY TRAINING FOR THE WORKING CREW. THIS WILL INCLUDE BUT NOT BE LIMITED TO A) FALL PROTECTION B) CONFINED SPACE C) ELECTRICAL SAFETY D) TRENCHING AND EXCAVATION E) CONSTRUCTION SAFETY PROCEDURES.
11. ALL SITE WORK SHALL BE AS INDICATED ON THE STAMPED CONSTRUCTION DRAWINGS AND PROJECT SPECIFICATIONS, LATEST APPROVED REVISION.
12. CONTRACTOR SHALL KEEP THE SITE FREE FROM ACCUMULATING WASTE MATERIAL, DEBRIS, AND TRASH AT THE COMPLETION OF THE WORK. IF NECESSARY, RUBBISH, STUMPS, DEBRIS, STICKS, STONES AND OTHER REFUSE SHALL BE REMOVED FROM THE SITE AND DISPOSED OF LEGALLY.
13. ALL EXISTING INACTIVE SEWER, WATER, GAS, ELECTRIC AND OTHER UTILITIES, WHICH INTERFERE WITH THE EXECUTION OF THE WORK, SHALL BE REMOVED AND/OR CAPPED, PLUGGED OR OTHERWISE DISCONTINUED AT POINTS WHICH WILL NOT INTERFERE WITH THE EXECUTION OF THE WORK, SUBJECT TO THE APPROVAL OF CONTRACTOR, TOWER OWNER, CROWN CASTLE USA INC., AND/OR LOCAL UTILITIES.
14. THE CONTRACTOR SHALL PROVIDE SITE SIGNAGE IN ACCORDANCE WITH THE TECHNICAL SPECIFICATION FOR SITE SIGNAGE REQUIRED BY LOCAL JURISDICTION AND SIGNAGE REQUIRED ON INDIVIDUAL PIECES OF EQUIPMENT, ROOMS, AND SHELTERS.
15. THE SITE SHALL BE GRADED TO CAUSE SURFACE WATER TO FLOW AWAY FROM THE CARRIER'S EQUIPMENT AND TOWER AREAS.
16. THE SUB GRADE SHALL BE COMPACTED AND BROUGHT TO A SMOOTH UNIFORM GRADE PRIOR TO FINISHED SURFACE APPLICATION.
17. THE AREAS OF THE OWNERS PROPERTY DISTURBED BY THE WORK AND NOT COVERED BY THE TOWER, EQUIPMENT OR DRIVEWAY, SHALL BE GRADED TO A UNIFORM SLOPE, AND STABILIZED TO PREVENT EROSION AS SPECIFIED ON THE CONSTRUCTION DRAWINGS AND/OR PROJECT SPECIFICATIONS.
18. CONTRACTOR SHALL MINIMIZE DISTURBANCE TO EXISTING SITE DURING CONSTRUCTION. EROSION CONTROL MEASURES, IF REQUIRED DURING CONSTRUCTION, SHALL BE IN CONFORMANCE WITH THE LOCAL GUIDELINES FOR EROSION AND SEDIMENT CONTROL.
19. THE CONTRACTOR SHALL PROTECT EXISTING IMPROVEMENTS, PAVEMENTS, CURBS, LANDSCAPING AND STRUCTURES. ANY DAMAGED PART SHALL BE REPAIRED AT CONTRACTOR'S EXPENSE TO THE SATISFACTION OF OWNER.
20. CONTRACTOR SHALL LEGALLY AND PROPERLY DISPOSE OF ALL SCRAP MATERIALS SUCH AS COAXIAL CABLES AND OTHER ITEMS REMOVED FROM THE EXISTING FACILITY. ANTENNAS REMOVED SHALL BE RETURNED TO THE OWNER'S DESIGNATED LOCATION.
21. CONTRACTOR SHALL LEAVE PREMISES IN CLEAN CONDITION. TRASH AND DEBRIS SHOULD BE REMOVED FROM SITE ON A DAILY BASIS.
22. NO FILL OR EMBANKMENT MATERIAL SHALL BE PLACED ON FROZEN GROUND. FROZEN MATERIALS, SNOW OR ICE SHALL NOT BE PLACED IN ANY FILL OR EMBANKMENT.

GENERAL NOTES:

1. FOR THE PURPOSE OF CONSTRUCTION DRAWING, THE FOLLOWING DEFINITIONS SHALL APPLY:
   CONTRACTOR: GENERAL CONTRACTOR RESPONSIBLE FOR CONSTRUCTION
   CARRIER: VERIZON
   TOWER OWNER: CROWN CASTLE USA INC.
2. THESE DRAWINGS HAVE BEEN PREPARED USING STANDARDS OF PROFESSIONAL CARE AND COMPLETENESS NORMALLY EXERCISED UNDER SIMILAR CIRCUMSTANCES BY REPUTABLE ENGINEERS IN THIS OR SIMILAR LOCALITIES. IT IS ASSUMED THAT THE WORK DEPICTED WILL BE PERFORMED BY AN EXPERIENCED CONTRACTOR AND/OR WORKPEOPLE WHO HAVE A WORKING KNOWLEDGE OF THE APPLICABLE CODE STANDARDS AND REQUIREMENTS AND OF INDUSTRY ACCEPTED STANDARD GOOD PRACTICE. AS NOT EVERY CONDITION OR ELEMENT IS (OR CAN BE) EXPLICITLY SHOWN ON THESE DRAWINGS, THE CONTRACTOR SHALL USE INDUSTRY ACCEPTED STANDARD GOOD PRACTICE FOR MISCELLANEOUS WORK NOT EXPLICITLY SHOWN.
3. THESE DRAWINGS REPRESENT THE FINISHED STRUCTURE. THEY DO NOT INDICATE THE MEANS OR METHODS OF CONSTRUCTION. THE CONTRACTOR SHALL BE SOLELY RESPONSIBLE FOR THE CONSTRUCTION MEANS, METHODS, TECHNIQUES, SEQUENCES, AND PROCEDURES. THE CONTRACTOR SHALL PROVIDE ALL MEASURES NECESSARY FOR PROTECTION OF LIFE AND PROPERTY DURING CONSTRUCTION. SUCH MEASURES SHALL INCLUDE, BUT NOT BE LIMITED TO, BRACING, FORMWORK, SHORING, ETC. SITE VISITS BY THE ENGINEER OR HIS REPRESENTATIVE WILL NOT INCLUDE INSPECTION OF THESE ITEMS AND IS FOR STRUCTURAL OBSERVATION OF THE FINISHED STRUCTURE ONLY.
4. NOTES AND DETAILS IN THE CONSTRUCTION DRAWINGS SHALL TAKE PRECEDENCE OVER GENERAL NOTES AND TYPICAL DETAILS. WHERE NO DETAILS ARE SHOWN, CONSTRUCTION SHALL CONFORM TO SIMILAR WORK ON THE PROJECT, AND/OR AS PROVIDED FOR IN THE CONTRACT DOCUMENTS. WHERE DISCREPANCIES OCCUR BETWEEN PLANS, DETAILS, GENERAL NOTES, AND SPECIFICATIONS, THE GREATER, MORE STRICT REQUIREMENTS, SHALL GOVERN. IF FURTHER CLARIFICATION IS REQUIRED CONTACT THE ENGINEER OF RECORD.
5. SUBSTANTIAL EFFORT HAS BEEN MADE TO PROVIDE ACCURATE DIMENSIONS AND MEASUREMENTS ON THE DRAWINGS TO ASSIST IN THE FABRICATION AND/OR PLACEMENT OF CONSTRUCTION ELEMENTS BUT IT IS THE SOLE RESPONSIBILITY OF THE CONTRACTOR TO FIELD VERIFY THE DIMENSIONS, MEASUREMENTS, AND/OR CLEARANCES SHOWN IN THE CONSTRUCTION DRAWINGS PRIOR TO FABRICATION OR CUTTING OF ANY NEW OR EXISTING CONSTRUCTION ELEMENTS. IF IT IS DETERMINED THAT THERE ARE DISCREPANCIES AND/OR CONFLICTS WITH THE CONSTRUCTION DRAWINGS THE ENGINEER OF RECORD IS TO BE NOTIFIED AS SOON AS POSSIBLE.
6. PRIOR TO THE SUBMISSION OF BIDS, THE BIDDING CONTRACTOR SHALL VISIT THE CELL SITE TO FAMILIARIZE WITH THE EXISTING CONDITIONS AND TO CONFIRM THAT THE WORK CAN BE ACCOMPLISHED AS SHOWN ON THE CONSTRUCTION DRAWINGS. ANY DISCREPANCY FOUND SHALL BE BROUGHT TO THE ATTENTION OF CROWN CASTLE.
7. ALL MATERIALS FURNISHED AND INSTALLED SHALL BE IN STRICT ACCORDANCE WITH ALL APPLICABLE CODES, REGULATIONS AND ORDINANCES. CONTRACTOR SHALL ISSUE ALL APPROPRIATE NOTICES AND COMPLY WITH ALL LAWS, ORDINANCES, RULES, REGULATIONS AND LAWFUL ORDERS OF ANY PUBLIC AUTHORITY REGARDING THE PERFORMANCE OF THE WORK. ALL WORK CARRIED OUT SHALL COMPLY WITH ALL APPLICABLE MUNICIPAL AND UTILITY COMPANY SPECIFICATIONS AND LOCAL JURISDICTIONAL CODES, ORDINANCES AND APPLICABLE REGULATIONS.
8. UNLESS NOTED OTHERWISE, THE WORK SHALL INCLUDE FURNISHING MATERIALS, EQUIPMENT, APPURTENANCES AND LABOR NECESSARY TO COMPLETE ALL INSTALLATIONS AS INDICATED ON THE DRAWINGS.
9. THE CONTRACTOR SHALL INSTALL ALL EQUIPMENT AND MATERIALS IN ACCORDANCE WITH MANUFACTURER'S RECOMMENDATIONS UNLESS SPECIFICALLY STATED OTHERWISE.
10. IF THE SPECIFIED EQUIPMENT CAN NOT BE INSTALLED AS SHOWN ON THESE DRAWINGS, THE CONTRACTOR SHALL PROPOSE AN ALTERNATIVE INSTALLATION FOR APPROVAL BY THE CARRIER AND CROWN CASTLE PRIOR TO PROCEEDING WITH ANY SUCH CHANGE OF INSTALLATION.
11. CONTRACTOR IS TO PERFORM A SITE INVESTIGATION AND IS TO DETERMINE THE BEST ROUTING OF ALL CONDUITS FOR POWER, AND TELCO AND FOR GROUNDING CABLES AS SHOWN IN THE POWER, TELCO, AND GROUNDING PLAN DRAWINGS.
12. THE CONTRACTOR SHALL PROTECT EXISTING IMPROVEMENTS, PAVEMENTS, CURBS, LANDSCAPING AND STRUCTURES. ANY DAMAGED PART SHALL BE REPAIRED AT CONTRACTOR'S EXPENSE TO THE SATISFACTION OF CROWN CASTLE USA INC.
13. CONTRACTOR SHALL LEGALLY AND PROPERLY DISPOSE OF ALL SCRAP MATERIALS SUCH AS COAXIAL CABLES AND OTHER ITEMS REMOVED FROM THE EXISTING FACILITY. ANTENNAS REMOVED SHALL BE RETURNED TO THE OWNER'S DESIGNATED LOCATION.
14. CONTRACTOR SHALL LEAVE PREMISES IN CLEAN CONDITION. TRASH AND DEBRIS SHOULD BE REMOVED FROM SITE ON A DAILY BASIS.

CONCRETE, FOUNDATIONS, AND REINFORCING STEEL:

1. ALL CONCRETE WORK SHALL BE IN ACCORDANCE WITH THE ACI 301, ACI 318, ACI 336, ASTM A184, ASTM A185 AND THE DESIGN AND CONSTRUCTION SPECIFICATION FOR CAST–IN–PLACE CONCRETE.
2. UNLESS NOTED OTHERWISE, SOIL BEARING PRESSURE USED FOR DESIGN OF SLABS AND FOUNDATIONS IS ASSUMED TO BE 1000 psf.
3. ALL CONCRETE SHALL HAVE A MINIMUM COMPRESSIVE STRENGTH (f'c) OF 3000 psi AT 28 DAYS, UNLESS NOTED OTHERWISE. NO MORE THAN 90 MINUTES SHALL ELAPSE FROM BATCH TIME TO TIME OF PLACEMENT UNLESS APPROVED BY THE ENGINEER OF RECORD. TEMPERATURE OF CONCRETE SHALL NOT EXCEED 90°f AT TIME OF PLACEMENT.
4. CONCRETE EXPOSED TO FREEZE–THAW CYCLES SHALL CONTAIN AIR ENTRAINING ADMIXTURES. AMOUNT OF AIR ENTRAINMENT TO BE BASED ON SIZE OF AGGREGATE AND F3 CLASS EXPOSURE (VERY SEVERE). CEMENT USED TO BE TYPE II PORTLAND CEMENT WITH A MAXIMUM WATER–TO–CEMENT RATIO (W/C) OF 0.45.
5. ALL STEEL REINFORCING SHALL CONFORM TO ASTM A615. ALL WELDED WIRE FABRIC (WWF) SHALL CONFORM TO ASTM A185. ALL SPLICES SHALL BE CLASS "B" TENSION SPLICES, UNLESS NOTED OTHERWISE. ALL HOOKS SHALL BE STANDARD 90 DEGREE HOOKS, UNLESS NOTED OTHERWISE. YIELD STRENGTH (Fy) OF STANDARD DEFORMED BARS ARE AS FOLLOWS:
   #4 BARS AND SMALLER....................40 ksi
   #5 BARS AND LARGER....................60 ksi
6. THE FOLLOWING MINIMUM CONCRETE COVER SHALL BE PROVIDED FOR REINFORCING STEEL UNLESS SHOWN OTHERWISE ON DRAWINGS:
   CONCRETE CAST AGAINST AND PERMANENTLY EXPOSED TO EARTH....................3"
   CONCRETE EXPOSED TO EARTH OR WEATHER:
      #6 BARS AND LARGER....................2"
      #5 BARS AND SMALLER....................1–1/2"
   CONCRETE NOT EXPOSED TO EARTH OR WEATHER:
      SLAB AND WALLS....................3/4"
      BEAMS AND COLUMNS....................1–1/2"
7. A TOOLED EDGE OR A 3/4" CHAMFER SHALL BE PROVIDED AT ALL EXPOSED EDGES OF CONCRETE, UNLESS NOTED OTHERWISE, IN ACCORDANCE WITH ACI 301 SECTION 4.2.4.

GREENFIELD GROUNDING NOTES:

1. ALL GROUND ELECTRODE SYSTEMS (INCLUDING TELECOMMUNICATION, RADIO, LIGHTNING PROTECTION AND AC POWER GES'S) SHALL BE BONDED TOGETHER AT OR BELOW GRADE, BY TWO OR MORE COPPER BONDING CONDUCTORS IN ACCORDANCE WITH THE NEC.
2. THE CONTRACTOR SHALL PERFORM IEEE FALL–OF–POTENTAL RESISTANCE TO EARTH TESTING (PER IEEE 1100 AND 81) FOR GROUND ELECTRODE SYSTEMS, THE CONTRACTOR SHALL FURNISH AND INSTALL SUPPLEMENTAL GROUND ELECTRODES AS NEEDED TO ACHIEVE A TEST RESULT OF 5 OHMS OR LESS.
3. THE CONTRACTOR IS RESPONSIBLE FOR PROPERLY SEQUENCING GROUNDING AND UNDERGROUND CONDUIT INSTALLATION AS TO PREVENT ANY LOSS OF CONTINUITY IN THE GROUNDING SYSTEM OR DAMAGE TO THE CONDUIT AND PROVIDE TESTING RESULTS.
4. METAL CONDUIT AND TRAY SHALL BE GROUNDED AND MADE ELECTRICALLY CONTINUOUS WITH LISTED BONDING FITTINGS OR BY BONDING ACROSS THE DISCONTINUITY WITH #6 COPPER WIRE UL APPROVED GROUNDING TYPE CONDUIT CLAMPS.
5. METAL RACEWAY SHALL NOT BE USED AS THE NEC REQUIRED EQUIPMENT GROUND CONDUCTOR. STRANDED COPPER CONDUCTORS WITH GREEN INSULATION, SIZED IN ACCORDANCE WITH THE NEC, SHALL BE FURNISHED AND INSTALLED WITH THE POWER CIRCUITS TO BTS EQUIPMENT.
6. EACH CABINET FRAME SHALL BE DIRECTLY CONNECTED TO THE MASTER GROUND BAR WITH GREEN INSULATED SUPPLEMENTAL EQUIPMENT GROUND WIRES, #6 STRANDED COPPER OR LARGER FOR INDOOR BTS; #2 BARE SOLID TINNED COPPER FOR OUTDOOR BTS.
7. CONNECTIONS TO THE GROUND BUS SHALL NOT BE DOUBLED UP OR STACKED BACK TO BACK CONNECTIONS ON OPPOSITE SIDE OF THE GROUND BUS ARE PERMITTED.
8. ALL EXTERIOR GROUND CONDUCTORS BETWEEN EQUIPMENT/GROUND BARS AND THE GROUND RING SHALL BE #2 SOLID TINNED COPPER UNLESS OTHERWISE INDICATED.
9. ALUMINUM CONDUCTOR OR COPPER CLAD STEEL CONDUCTOR SHALL NOT BE USED FOR GROUNDING CONNECTIONS.
10. USE OF 90° BENDS IN THE PROTECTION GROUNDING CONDUCTORS SHALL BE AVOIDED WHEN 45° BENDS CAN BE ADEQUATELY SUPPORTED.
11. EXOTHERMIC WELDS SHALL BE USED FOR ALL GROUNDING CONNECTIONS BELOW GRADE.
12. ALL GROUND CONNECTIONS ABOVE GRADE (INTERIOR AND EXTERIOR) SHALL BE FORMED USING HIGH PRESS CRIMPS.
13. COMPRESSION GROUND CONNECTIONS MAY BE REPLACED BY EXOTHERMIC WELD CONNECTIONS.
14. ICE BRIDGE BONDING CONDUCTORS SHALL BE EXOTHERMICALLY BONDED OR BOLTED TO THE BRIDGE AND THE TOWER GROUND BAR.
15. APPROVED ANTIOXIDANT COATINGS (i.e. CONDUCTIVE GEL OR PASTE) SHALL BE USED ON ALL COMPRESSION AND BOLTED GROUND CONNECTIONS.
16. ALL EXTERIOR GROUND CONNECTIONS SHALL BE COATED WITH A CORROSION RESISTANT MATERIAL.
17. MISCELLANEOUS ELECTRICAL AND NON–ELECTRICAL METAL BOXES, FRAMES AND SUPPORTS SHALL BE BONDED TO THE GROUND RING, IN ACCORDANCE WITH THE NEC.
18. BOND ALL METALLIC OBJECTS WITHIN 6 ft OF MAIN GROUND RING WITH (1) #2 BARE SOLID TINNED COPPER GROUND CONDUCTOR.
19. GROUND CONDUCTORS USED FOR THE FACILITY GROUNDING AND LIGHTNING PROTECTION SYSTEMS SHALL NOT BE ROUTED THROUGH METALLIC OBJECTS THAT FORM A RING AROUND THE CONDUCTOR, SUCH AS METALLIC CONDUITS, METAL SUPPORT CLIPS OR SLEEVES THROUGH WALLS OR FLOORS. WHEN IT IS REQUIRED TO BE HOUSED IN CONDUIT TO MEET CODE REQUIREMENTS OR LOCAL CONDITIONS, NON–METALLIC MATERIAL SUCH AS PVC CONDUIT SHALL BE USED. WHERE USE OF METAL CONDUIT IS UNAVOIDABLE (i.e., NONMETALLIC CONDUIT PROHIBITED BY LOCAL CODE) THE GROUND CONDUCTOR SHALL BE BONDED TO EACH END OF THE METAL CONDUIT.
20. ALL GROUNDS THAT TRANSITION FROM BELOW GRADE TO ABOVE GRADE MUST BE #2 BARE SOLID TINNED COPPER IN 3/4" NON–METALLIC, FLEXIBLE CONDUIT FROM 24" BELOW GRADE TO WITHIN 3" TO 6" OF CAD–WELD TERMINATION POINT. THE EXPOSED END OF THE CONDUIT MUST BE SEALED WITH SILICONE CAULK. (ADD TRANSITIONING GROUND STANDARD DETAIL AS WELL).
21. BUILDINGS WHERE THE MAIN GROUNDING CONDUCTORS ARE REQUIRED TO BE ROUTED TO GRADE, THE CONTRACTOR SHALL ROUTE TWO GROUNDING CONDUCTORS FROM THE ROOFTOP, TOWERS, AND WATER TOWERS GROUNDING RING, TO THE EXISTING GROUNDING SYSTEM, THE GROUNDING CONDUCTORS SHALL NOT BE SMALLER THAN 2/0 COPPER. ROOFTOP GROUNDING RING SHALL BE BONDED TO THE EXISTING GROUNDING SYSTEM, THE BUILDING STEEL COLUMNS, LIGHTNING PROTECTION SYSTEM, AND BUILDING MAIN WATER LINE (FERROUS OR NONFERROUS METAL PIPING ONLY).

ELECTRICAL INSTALLATION NOTES:

1. ALL ELECTRICAL WORK SHALL BE PERFORMED IN ACCORDANCE WITH THE PROJECT SPECIFICATIONS, NEC AND ALL APPLICABLE FEDERAL, STATE, AND LOCAL CODES/ORDINANCES.
2. CONDUIT ROUTINGS ARE SCHEMATIC. CONTRACTOR SHALL INSTALL CONDUITS SO THAT ACCESS TO EQUIPMENT IS NOT BLOCKED AND TRIP HAZARDS ARE ELIMINATED.
3. WIRING, RACEWAY AND SUPPORT METHODS AND MATERIALS SHALL COMPLY WITH THE REQUIREMENTS OF THE NEC.
4. ALL CIRCUITS SHALL BE SEGREGATED AND MAINTAIN MINIMUM CABLESEPARATION AS REQUIRED BY THE NEC.
   - 4.1. ALL EQUIPMENT SHALL BEAR THE UNDERWRITERS LABORATORIES LABEL OF APPROVAL, AND SHALL CONFORM TO REQUIREMENT OF THE NATIONAL ELECTRICAL CODE.
   - 4.2. ALL OVERCURRENT DEVICES SHALL HAVE AN INTERRUPTING CURRENT RATING THAT SHALL BE GREATER THAN THE SHORT CIRCUIT CURRENT TO WHICH THEY ARE SUBJECTED, 22,000 AIC MINIMUM. VERYIFY AVAILABLE SHORT CIRCUIT CURRENT DOES NOT EXCEED THE RATING OF ELECTRICAL EQUIPMENT IN ACCORDANCE WITH ARTICLE 110.24 NEC OR THE MOST CURRENT ADOPTED CODE PRE THE GOVERNING JURISDICTION.
5. EACH END OF EVERY POWER PHASE CONDUCTOR, GROUNDING CONDUCTOR, AND TELCO CONDUCTOR OR CABLESHALL BE LABELED WITH COLOR–CODED INSULATION OR ELECTRICAL TAPE (3M BRAND, 1/2" PLASTIC ELECTRICAL TAPE WITH UV PROTECTION, OR EQUAL). THE IDENTIFICATION METHOD SHALL CONFORM WITH NEC AND OSHA.
6. ALL ELECTRICAL COMPONENTS SHALL BE CLEARLY LABELED WITH LAMICOID TAGS SHOWING THEIR RATED VOLTAGE, PHASE CONFIGURATION, WIRE CONFIGURATION, POWER OR AMPACITY RATING AND BRANCH CIRCUIT ID NUMBERS (i.e. PANEL BOARD AND CIRCUIT ID'S).
7. PANEL BOARDS (ID NUMBERS) SHALL BE CLEARLY LABELED WITH PLASTIC LABELS.
8. ALL TIE WRAPS SHALL BE CUT FLUSH WITH APPROVED CUTTING TOOL TO REMOVE SHARP EDGES.
9. ALL POWER AND EQUIPMENT GROUND WIRING IN TUBING OR CONDUIT SHALL BE SINGLE COPPER CONDUCTOR (#14 OR LARGER) WITH TYPE THHW, THWN, THWN–2, XHHW, XHHW–2, THW, THW–2, RHW, OR RHW–2 INSULATION UNLESS OTHERWISE SPECIFIED.
10. SUPPLEMENTAL EQUIPMENT GROUND WIRING LOCATED INDOORS SHALL BE SINGLE COPPER CONDUCTOR (#6 OR LARGER) WITH TYPE THHW, THWN, THWN–2, XHHW, XHHW–2, THW, THW–2, RHW, OR RHW–2 INSULATION UNLESS OTHERWISE SPECIFIED.
11. POWER AND CONTROL WIRING IN FLEXIBLE CORD SHALL BE MULTI–CONDUCTOR, TYPE SOOW CORD (#14 OR LARGER) UNLESS OTHERWISE SPECIFIED.
12. POWER AND CONTROL WIRING FOR USE IN CABLE TRAY SHALL BE MULTI–CONDUCTOR, TYPE TC CABLE (#14 OR LARGER), WITH TYPE THHW, THWN, THWN–2, XHHW, XHHW–2, THW, THW–2, RHW, OR RHW–2 INSULATION UNLESS OTHERWISE SPECIFIED.
13. ALL POWER AND GROUNDING CONNECTIONS SHALL BE CRIMP–STYLE, COMPRESSION WIRE LUGS AND WIRE NUTS BY THOMAS AND BETTS (OR EQUAL). LUGS AND WIRE NUTS SHALL BE RATED FOR OPERATION NOT LESS THAN 75° C (90° C IF AVAILABLE).
14. RACEWAY AND CABLE TRAY SHALL BE LISTED OR LABELED FOR ELECTRICAL USE IN ACCORDANCE WITH NEMA, UL, ANSI/IEEE AND NEC.
15. ELECTRICAL METALLIC TUBING (EMT), INTERMEDIATE METAL CONDUIT (IMC), OR RIGID METAL CONDUIT (RMC) SHALL BE USED FOR EXPOSED INDOOR LOCATIONS.
16. ELECTRICAL METALLIC TUBING (EMT) OR METAL–CLAD CABLE (MC) SHALL BE USED FOR CONCEALED INDOOR LOCATIONS.
17. UNDERGROUND CONDUIT SHALL BE SCHEDULE 40 PVC ON STRAIGHTS AND SCHEDULE 80 PVC UNDER ALL TRAFFIC EASEMENTS AND ALL ELBOWS/90s. ABOVE GRADE CONDUIT TO BE SCH 80 PVC OR IMC/RMC CONDUIT. EMT IS ALLOWED AT STUB UP LOCATIONS AND INDOORS ONLY.
18. LIQUID–TIGHT FLEXIBLE METALLIC CONDUIT (LIQUID–TITE FLEX) SHALL BE USED INDOORS AND OUTDOORS, WHERE VIBRATION OCCURS OR FLEXIBILITY IS NEEDED.
19. CONDUIT AND TUBING FITTINGS SHALL BE THREADED OR COMPRESSION–TYPE AND APPROVED FOR THE LOCATION USED. SET SCREW FITTINGS ARE NOT ACCEPTABLE.
20. CABINETS, BOXES AND WIRE WAYS SHALL BE LABELED FOR ELECTRICAL USE IN ACCORDANCE WITH NEMA, UL, ANSI/IEEE AND THE NEC.
21. WIREWAYS SHALL BE METAL WITH AN ENAMEL FINISH AND INCLUDE A HINGED COVER, DESIGNED TO SWING OPEN DOWNWARDS (WIREMOLD SPECMATE WIREWAY).
22. SLOTTED WIRING DUCT SHALL BE PVC AND INCLUDE COVER (PANDUIT TYPE E OR EQUAL).
23. CONDUITS SHALL BE FASTENED SECURELY IN PLACE WITH APPROVED NON–PERFORATED STRAPS AND HANGERS. EXPLOSIVE DEVICES (i.e. POWDER–ACTUATED) FOR ATTACHING HANGERS TO STRUCTURE WILL NOT BE PERMITTED. CLOSELY FOLLOW THE LINES OF THE STRUCTURE, MAINTAIN CLOSE PROXIMITY TO THE STRUCTURE AND KEEP CONDUITS IN TIGHT ENVELOPES. CHANGES IN DIRECTION TO ROUTE AROUND OBSTACLES SHALL BE MADE WITH CONDUIT OUTLET BODIES. CONDUIT SHALL BE INSTALLED IN A NEAT AND WORKMANLIKE MANNER. PARALLEL AND PERPENDICULAR TO STRUCTURE WALL AND CEILING LINES. ALL CONDUIT SHALL BE FISHED TO CLEAR OBSTRUCTIONS. ENDS OF CONDUITS SHALL BE TEMPORARILY CAPPED FLUSH TO FINISH GRADE TO PREVENT CONCRETE, PLASTER OR DIRT FROM ENTERING. CONDUITS SHALL BE RIGIDLY CLAMPED TO BOXES BY GALVANIZED MALLEABLE IRON BUSHING ON INSIDE AND GALVANIZED MALLEABLE IRON LOCKNUT ON OUTSIDE AND INSIDE.
24. EQUIPMENT CABINETS, TERMINAL BOXES, JUNCTION BOXES AND PULL BOXES SHALL BE GALVANIZED OR EPOXY–COATED SHEET STEEL. SHALL MEET OR EXCEED UL 50 AND BE RATED NEMA 1 (OR BETTER) FOR INTERIOR LOCATIONS AND NEMA 3R (OR BETTER) FOR EXTERIOR LOCATIONS.
25. METAL RECEPTACLE, SWITCH AND DEVICE BOXES SHALL BE GALVANIZED, EPOXY–COATED OR NON–CORRODING; SHALL MEET OR EXCEED UL 514A AND NEMA OS 1 AND BE RATED NEMA 1 (OR BETTER) FOR INTERIOR LOCATIONS AND WEATHER PROTECTED (WP OR BETTER) FOR EXTERIOR LOCATIONS.
26. NONMETALLIC RECEPTACLE, SWITCH AND DEVICE BOXES SHALL MEET OR EXCEED NEMA OS 2 (NEWEST REVISION) AND BE RATED NEMA 1 (OR BETTER) FOR INTERIOR LOCATIONS AND WEATHER PROTECTED (WP OR BETTER) FOR EXTERIOR LOCATIONS.
27. THE CONTRACTOR SHALL NOTIFY AND OBTAIN NECESSARY AUTHORIZATION FROM THE CARRIER AND/OR CROWN CASTLE USA INC. BEFORE COMMENCING WORK ON THE AC POWER DISTRIBUTION PANELS.
28. THE CONTRACTOR SHALL PROVIDE NECESSARY TAGGING ON THE BREAKERS, CABLES AND DISTRIBUTION PANELS IN ACCORDANCE WITH THE APPLICABLE CODES AND STANDARDS TO SAFEGUARD LIFE AND PROPERTY.
29. INSTALL LAMICOID LABEL ON THE METER CENTER TO SHOW "VERIZON".
30. ALL EMPTY/SPARE CONDUITS THAT ARE INSTALLED ARE TO HAVE A METERED MULE TAPE PULL CORD INSTALLED.

CONDUCTOR COLOR CODE

SYSTEM	CONDUCTOR	COLOR
120/240V, 1Ø	A PHASE	BLACK
	B PHASE	RED
	NEUTRAL	WHITE
	GROUND	GREEN
120/208V, 3Ø	A PHASE	BLACK
	B PHASE	RED
	C PHASE	BLUE
	NEUTRAL	WHITE
	GROUND	GREEN
277/480V, 3Ø	A PHASE	BROWN
	B PHASE	ORANGE OR PURPLE
	C PHASE	YELLOW
	NEUTRAL	GREY
	GROUND	GREEN
DC VOLTAGE	POS (+)	RED**
	NEG (–)	BLACK**

* SEE NEC 210.5(C)(1) AND (2)
** POLARITY MARKED AT TERMINATION

APWA UNIFORM COLOR CODE:

WHITE	PROPOSED EXCAVATION
PINK	TEMPORARY SURVEY MARKINGS
RED	ELECTRIC POWER LINES, CABLES, CONDUIT, AND LIGHTING CABLES
YELLOW	GAS, OIL, STEAM, PETROLEUM, OR GASEOUS MATERIALS
ORANGE	COMMUNICATION, ALARM OR SIGNAL LINES, CABLES, OR CONDUIT AND TRAFFIC LOOPS
BLUE	POTABLE WATER
PURPLE	RECLAIMED WATER, IRRIGATION, AND SLURRY LINES
GREEN	SEWERS AND DRAIN LINES

ABBREVIATIONS:

ANT	ANTENNA
(E)	EXISTING
FIF	FACILITY INTERFACE FRAME
GEN	GENERATOR
GPS	GLOBAL POSITIONING SYSTEM
GSM	GLOBAL SYSTEM FOR MOBILE
LTE	LONG TERM EVOLUTION
MGB	MASTER GROUND BAR
MW	MICROWAVE
(N)	NEW
NEC	NATIONAL ELECTRIC CODE
(P)	PROPOSED
PP	POWER PLANT
QTY	QUANTITY
RECT	RECTIFIER
RBS	RADIO BASE STATION
RET	REMOTE ELECTRIC TILT
RFDS	RADIO FREQUENCY DATA SHEET
RRH	REMOTE RADIO HEAD
RRU	REMOTE RADIO UNIT
SIAD	SMART INTEGRATED DEVICE
TMA	TOWER MOUNTED AMPLIFIER
TYP	TYPICAL
UMTS	UNIVERSAL MOBILE TELECOMMUNICATIONS SYSTEM
W.P.	WORK POINT

verizon

CROWN CASTLE

VERIZON SITE NUMBER:
5000382147

BU #: **812072**

CROWN CASTLE SITE NAME
DXZW

5455 NW 19TH ST.
LAUDERHILL, FL 33313

EXISTING 126'-0"
MONOPOLE

ISSUED FOR:

REV	DATE	DRWN	DESCRIPTION	DES./QA
0	1/15/25	LAW	CONSTRUCTION	MD

Signed by:
Maribel Dentinger
01434153466B482...

No. 57890

1/21/2025 | 6:45:43 AM CST

1/15/25

CROWN CASTLE USA INC.
PROFESSIONAL ENGINEER LICENSE: #57890
COA #28970

IT IS A VIOLATION OF LAW FOR ANY PERSON, UNLESS THEY ARE ACTING UNDER THE DIRECTION OF A LICENSED PROFESSIONAL ENGINEER, TO ALTER THIS DOCUMENT.

SHEET NUMBER: T-2

REVISION: 0

CC VERIZON NATIONAL ANTENNA AMENDMENT_2025-01-03

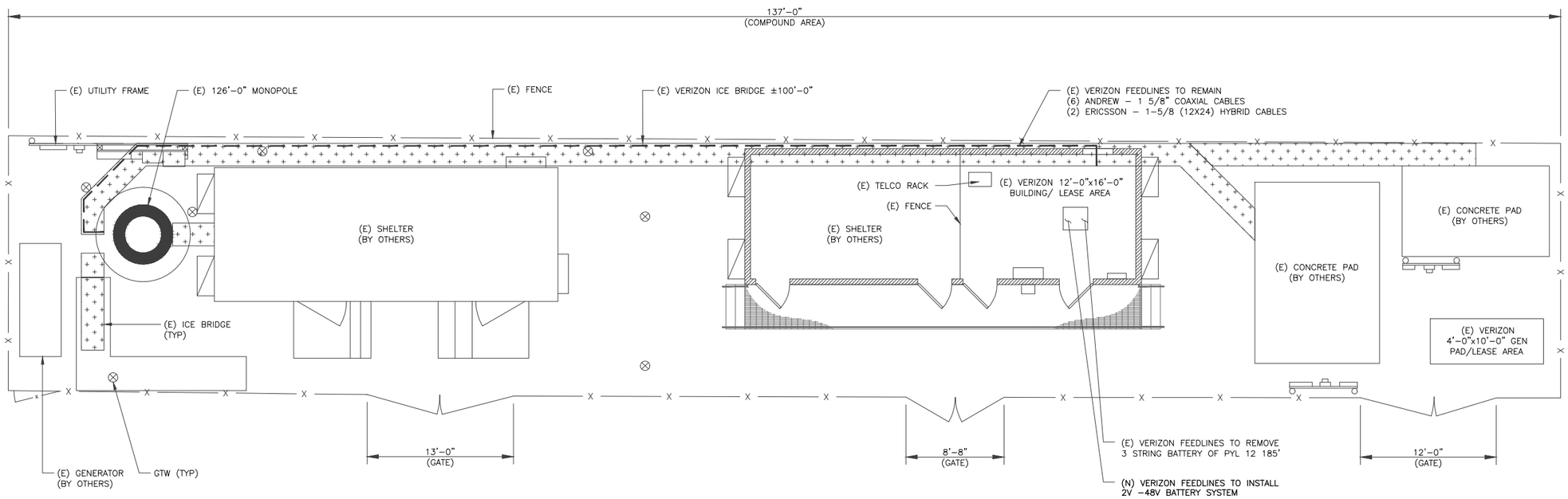

1 SITE PLAN
SCALE: 4' 2' 0 4'
3/16"=1'-0" (FULL SIZE)
3/32"=1'-0" (11x17)

N

verizon

CROWN CASTLE

VERIZON SITE NUMBER:
5000382147

BU #: **812072**

CROWN CASTLE SITE NAME
DXZW

5455 NW 19TH ST.
LAUDERHILL, FL 33313

EXISTING 126'-0"
MONOPOLE

ISSUED FOR:

REV	DATE	DRWN	DESCRIPTION	DES./QA
0	1/15/25	LAW	CONSTRUCTION	MD

Signed by:
Marlon Dustinger
01434152068402...

MARLON DUSTINGER
LICENSE
No. 57890
STATE OF
FLORIDA
PROFESSIONAL ENGINEER

1/21/2025 | 6:45:43 AM CST
1/15/25

CROWN CASTLE USA INC.
PROFESSIONAL ENGINEER LICENSE: #57890
COA #28970

SHEET NUMBER: C-1

REVISION: 0

VERIZON EQUIPMENT
ANTENNA CL: 110'-0"
MOUNT CL: 109'-0"

FAA APPROVED HEIGHT
135'-0"

ASR HEIGHT FOR FUTURE USE
135'-0" PER REGISTRATION #1278615

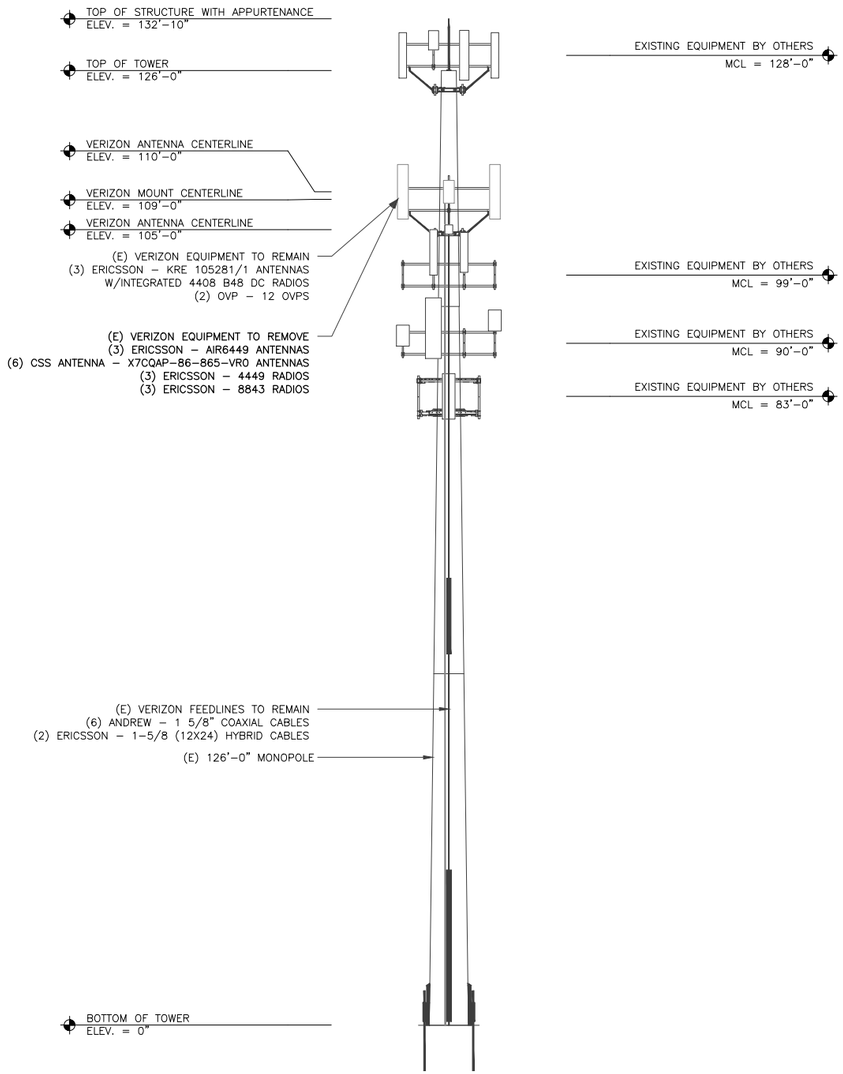

1 EXISTING TOWER ELEVATION
SCALE: 10' 5' 0 10' 1"=10'-0" (FULL SIZE) 1"=20'-0" (11x17)

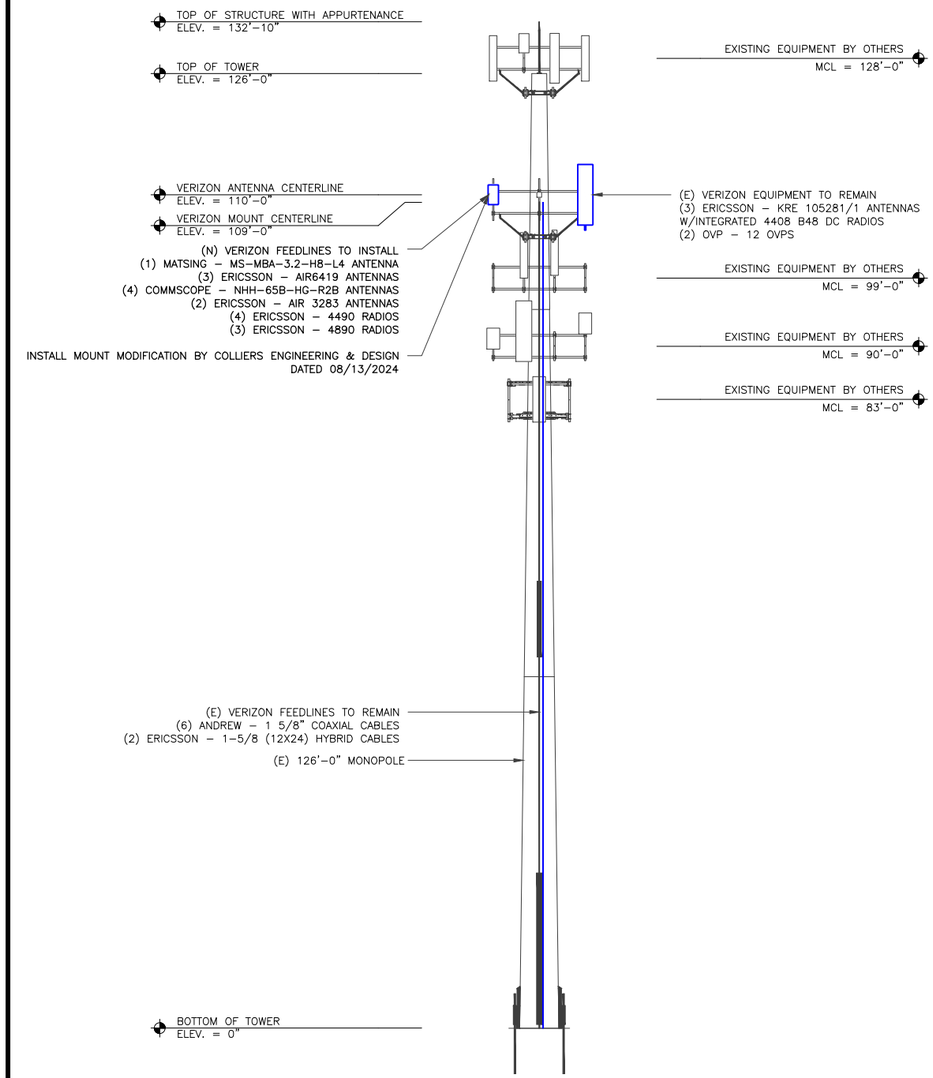

INSTALLER NOTE:

NO PROPOSED LOADING TO BE ADDED UNTIL MOUNT MODIFICATIONS ARE INSTALLED PER MOUNT ANALYSIS BY COLLIERS ENGINEERING & DESIGN DATED 08/13/2024.

2 FINAL TOWER ELEVATION
SCALE: 10' 5' 0 10' 1"=10'-0" (FULL SIZE) 1"=20'-0" (11x17)

verizon

CROWN CASTLE

VERIZON SITE NUMBER:
5000382147

BU #: **812072**

CROWN CASTLE SITE NAME
DXZW

5455 NW 19TH ST.
LAUDERHILL, FL 33313

EXISTING 126'-0"
MONOPOLE

ISSUED FOR:

REV	DATE	DRWN	DESCRIPTION	DES./QA
0	1/15/25	LAW	CONSTRUCTION	MD

Signed by:
Marlon Dustinger
01434150685402

MARLON DUSTINGER
LICENSE
No. 57890
STATE OF
FLORIDA
PROFESSIONAL ENGINEER

1/21/2025 | 6:45:43 AM CST

CROWN CASTLE USA INC.
PROFESSIONAL ENGINEER LICENSE: #57890
COA #28970

SHEET NUMBER: C-2

REVISION: 0

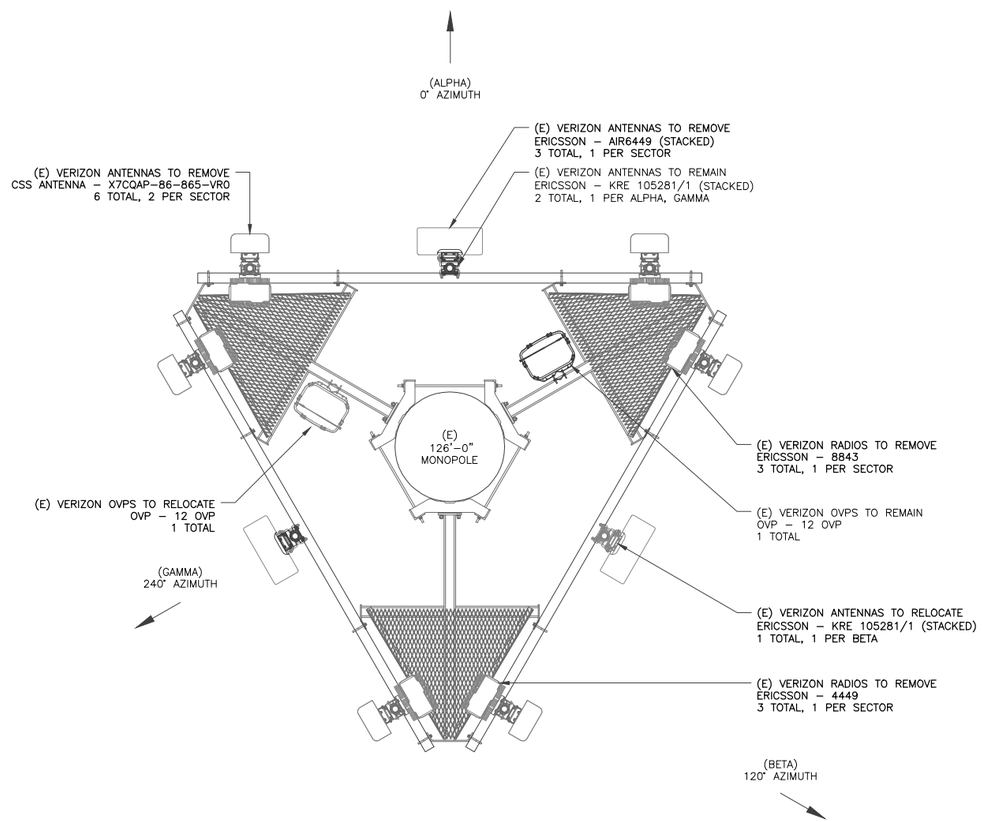

1 EXISTING ANTENNA PLAN @ 109'–0"

SCALE: 2' 1' 0 2' 1/2"=1'–0" (FULL SIZE) 1/4"=1'–0" (11x17)

N

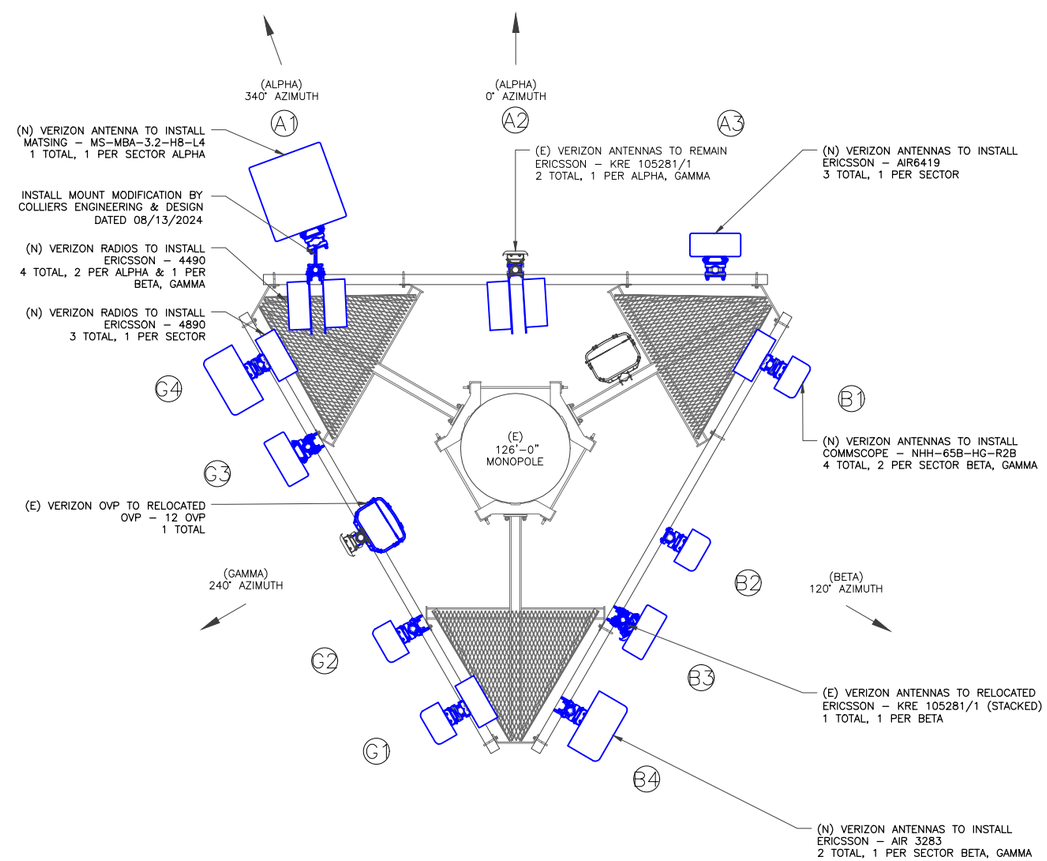

INSTALLER NOTE:

NO PROPOSED LOADING TO BE ADDED UNTIL MOUNT MODIFICATIONS ARE INSTALLED PER MOUNT ANALYSIS BY COLLIERS ENGINEERING & DESIGN DATED 08/13/2024.

2 FINAL ANTENNA PLAN @ 109'–0"

SCALE: 2' 1' 0 2' 1/2"=1'–0" (FULL SIZE) 1/4"=1'–0" (11x17)

N

verizon

CROWN CASTLE

VERIZON SITE NUMBER:
5000382147

BU #: **812072**

CROWN CASTLE SITE NAME
DXZW

5455 NW 19TH ST.
LAUDERHILL, FL 33313

EXISTING 126'-0"
MONOPOLE

ISSUED FOR:

REV	DATE	DRWN	DESCRIPTION	DES./QA
0	1/15/25	LAW	CONSTRUCTION	MD

Signed by:
Marital Dudinger
01434153408482...

MARITAL DUDINGER
LICENSE
No. 57890
STATE OF
FLORIDA
PROFESSIONAL ENGINEER

1/21/2025 | 6:45:43 AM CST 1/15/25

CROWN CASTLE USA INC.
PROFESSIONAL ENGINEER LICENSE: #57890
COA #28970

IT IS A VIOLATION OF LAW FOR ANY PERSON, UNLESS THEY ARE ACTING UNDER THE DIRECTION OF A LICENSED PROFESSIONAL ENGINEER, TO ALTER THIS DOCUMENT.

SHEET NUMBER:	REVISION:
C-3	0

FINAL EQUIPMENT SCHEDULE
(GC TO VERIFY WITH CURRENT RFDS)

POSITION	ANTENNA				RADIO			DIPLEXER			*DOWNTILT		SURGE PROTECTION		CABLES			
	TECH	STATUS/MANUFACTURER MODEL	AZIMUTH	RAD CENTER	QTY.	STATUS/MODEL	LOCATION	QTY.	STATUS	LOCATION	ELECTRICAL	MECHANICAL	QTY.	STATUS/MODEL	QTY.	STATUS/TYPE	SIZE	LENGTH
A1	1900 AWS 700	(N) MATSING – MS-MBA-3.2-H8-L4	340°	110'-0"	1 1	(N) ERICSSON – 4490 (N) ERICSSON – 4890	TOWER TOWER	–	–	–	–	–	1	(E) OVP – 12 OVP	6	(E) COAXIAL CABLE	–	EXISTING
A2	1900 CBRS AWS 700	(E) ERICSSON – KRE 105281/1	0°	110'-0"	1 1	(N) ERICSSON – 4490 (N) ERICSSON – 4890	TOWER TOWER	–	–	–	–	–	–	–	2	(E) HYBRID CABLE	–	EXISTING
A3	L-SUB6	(N) ERICSSON – AIR6419	0°	110'-0"	–	–	–	–	–	–	–	–	–	–	–	–	–	–
B1	700	(N) COMMSCOPE – NHH-65B-HG-R2B	120°	110'-0"	1	(N) ERICSSON – 4490	TOWER	–	–	–	–	–	–	–	–	–	–	–
B2	700	(N) COMMSCOPE – NHH-65B-HG-R2B	120°	110'-0"	–	–	–	–	–	–	–	–	–	–	–	–	–	–
B3	CBRS L-SUB6	(E) ERICSSON – KRE 105281/1 (N) ERICSSON – AIR6419	120° 120°	110'-0" 110'-0"	–	–	–	–	–	–	–	–	–	–	–	–	–	–
B4	1900 AWS	(N) ERICSSON – AIR 3283	120°	110'-0"	–	–	–	–	–	–	–	–	–	–	–	–	–	–
G1	700	(N) COMMSCOPE – NHH-65B-HG-R2B	240°	110'-0"	1	(N) ERICSSON – 4490	TOWER	–	–	–	–	–	–	–	–	–	–	–
G2	700	(N) COMMSCOPE – NHH-65B-HG-R2B	240°	110'-0"	–	–	–	–	–	–	–	–	–	–	–	–	–	–
G3	CBRS	(E) ERICSSON – KRE 105281/1	240°	110'-0"	–	–	–	–	–	–	–	–	1	(E) OVP – 12 OVP	–	–	–	–
G4	L-SUB6	(N) ERICSSON – AIR6419	240°	110'-0"	–	–	–	–	–	–	–	–	–	–	–	–	–	–
G5	1900 AWS	(N) ERICSSON – AIR 3283	240°	110'-0"	1	(N) ERICSSON – 4890	TOWER	–	–	–	–	–	–	–	–	–	–	–

* REFER TO THE RFDS FOR MECHANICAL AND DOWNTILT INFORMATION

UNUSED FEEDLINES

–	–	–	–
–	–	–	–

1 FINAL EQUIPMENT SCHEDULE
SCALE: NOT TO SCALE

verizon

CROWN CASTLE

VERIZON SITE NUMBER:
5000382147

BU #: **812072**

CROWN CASTLE SITE NAME
DXZW

5455 NW 19TH ST.
LAUDERHILL, FL 33313

EXISTING 126'-0"
MONOPOLE

ISSUED FOR:

REV	DATE	DRWN	DESCRIPTION	DES./QA
0	1/15/25	LAW	CONSTRUCTION	MD

Signed by:
Marlon Dustinger
01434150685402...

MARLON DUSTINGER
LICENSE
No. 57890
STATE OF
FLORIDA
PROFESSIONAL ENGINEER

1/21/2025 | 6:45:43 AM CST

CROWN CASTLE USA INC.
PROFESSIONAL ENGINEER LICENSE: #57890
COA #28970

SHEET NUMBER: C-4

REVISION: 0

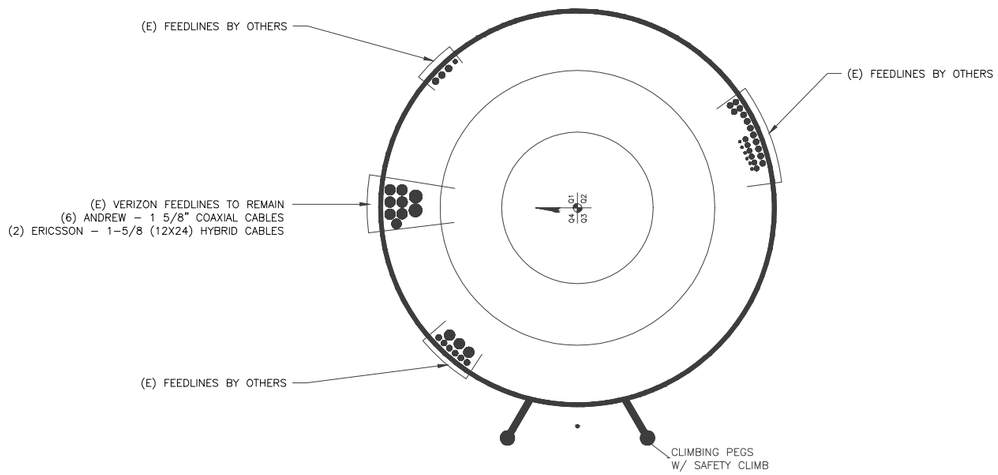

1 BASE LEVEL DETAIL
SCALE: NOT TO SCALE

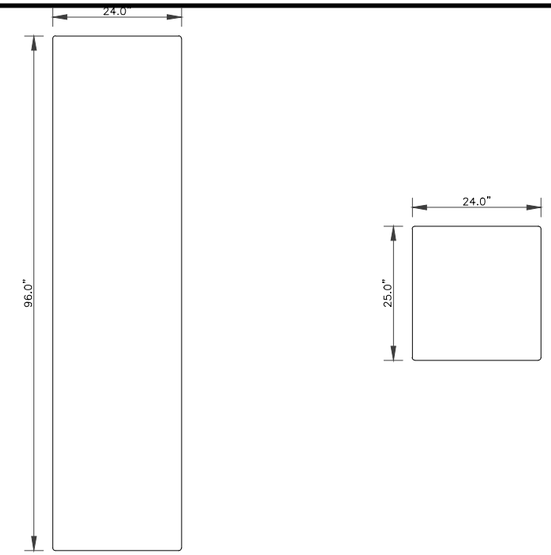

ANTENNA SPECS	
MANUFACTURER	MATSING
MODEL #	MS-MBA-3.2-H8-L4
HxWxD	96.0" x 24.0" x 25.0"
WEIGHT	165.0 LBS

2 MATSING – MS-MBA-3.2-H8-L4 DETAIL
SCALE: NOT TO SCALE

INSTALLER NOTES:

1. COMPLY WITH MANUFACTURERS INSTRUCTIONS TO ENSURE THAT ALL RRUs RECEIVE ELECTRICAL POWER WITHIN 24 HOURS OF BEING REMOVED FROM THE MANUFACTURER'S PACKAGING.
2. DO NOT OPEN RRU PACKAGES IN THE RAIN.
3. ALL PIPES, BRACKETS, AND MISCELLANEOUS HARDWARE TO BE GALVANIZED UNLESS NOTED OTHERWISE.
4. ANTENNA NOT SHOWN FOR CLARITY

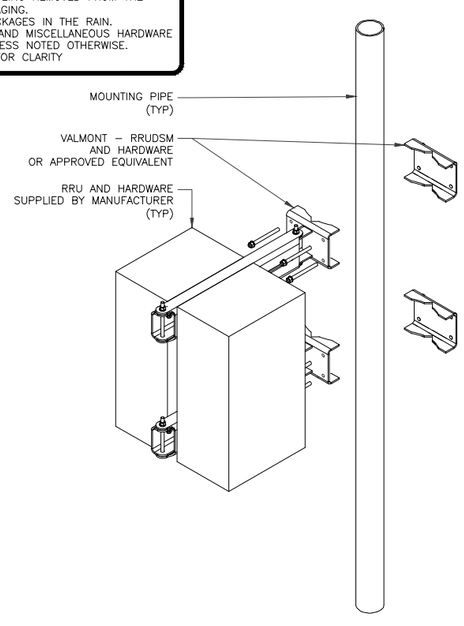

3 RRH MOUNTING DETAIL
SCALE: NOT TO SCALE

INSTALLER NOTES:

1. COMPLY WITH MANUFACTURERS INSTRUCTIONS TO ENSURE THAT ALL RRUs RECEIVE ELECTRICAL POWER WITHIN 24 HOURS OF BEING REMOVED FROM THE MANUFACTURER'S PACKAGING.
2. DO NOT OPEN RRU PACKAGES IN THE RAIN.
3. ALL PIPES, BRACKETS, AND MISCELLANEOUS HARDWARE TO BE GALVANIZED UNLESS NOTED OTHERWISE.

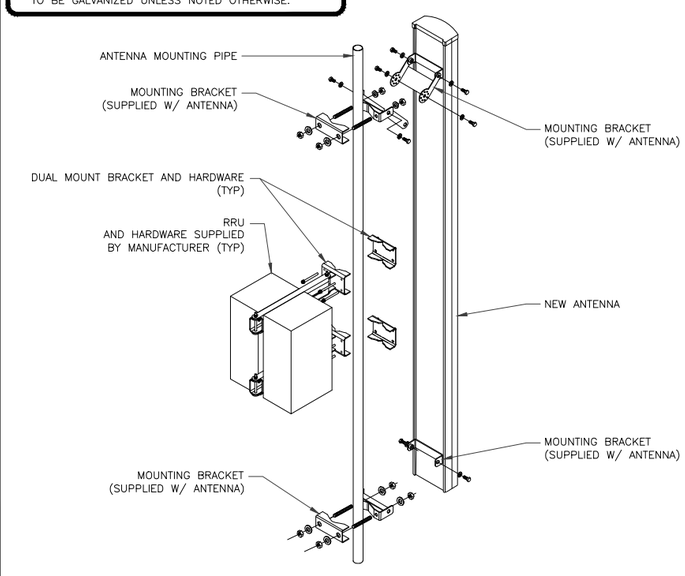

4 ANTENNA MOUNTING DETAIL
SCALE: NOT TO SCALE

ANTENNA SPECS	
MANUFACTURER	ERICSSON
MODEL #	AIR6419
HxWxD	31.1" x 16.1" x 7.3"
WEIGHT	55.4 LBS

5 ERICSSON – AIR6419 DETAIL
SCALE: NOT TO SCALE

verizon

CROWN CASTLE

VERIZON SITE NUMBER:
5000382147

BU #: **812072**

CROWN CASTLE SITE NAME
DXZW

5455 NW 19TH ST.
LAUDERHILL, FL 33313

EXISTING 126'-0"
MONOPOLE

ISSUED FOR:

REV	DATE	DRWN	DESCRIPTION	DES./QA
0	1/15/25	LAW	CONSTRUCTION	MD

Signed by:
Marital Dustinger
01434153406B402...

MARITAL DUSTINGER
LICENSE
No. 57890
STATE OF
FLORIDA
PROFESSIONAL ENGINEER

1/21/2025 | 6:45:43 AM CST
1/15/25

CROWN CASTLE USA INC.
PROFESSIONAL ENGINEER LICENSE: #57890
COA #28970

IT IS A VIOLATION OF LAW FOR ANY PERSON, UNLESS THEY ARE ACTING UNDER THE DIRECTION OF A LICENSED PROFESSIONAL ENGINEER, TO ALTER THIS DOCUMENT.

SHEET NUMBER: C-5.1

REVISION: 0

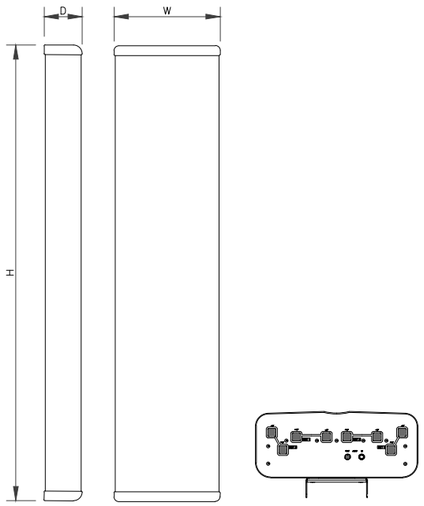

ANTENNA SPECS	
MANUFACTURER	COMMSCOPE
MODEL #	NHH-65B-HG-R2B
HxWxD	71.97" x 11.85" x 7.09"
WEIGHT	45.20 LBS

1 COMMSCOPE – NHH-65B-HG-R2B
SCALE: NOT TO SCALE

ANTENNA SPECS	
MANUFACTURER	ERICSSON
MODEL #	AIR 3283
HxWxD	47.24" x 20" x 10.88"
WEIGHT	103.64 LBS

2 ERICSSON – AIR 3283 DETAIL
SCALE: NOT TO SCALE

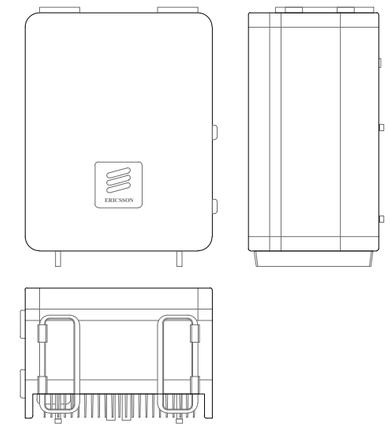

RADIO SPECS	
MANUFACTURER	ERICSSON
MODEL #	4490 B5/B12
HxWxD	15.12" x 17.48" x 6.77"
WEIGHT	20.83 LBS

3 ERICSSON – 4490 B5/B12
SCALE: NOT TO SCALE

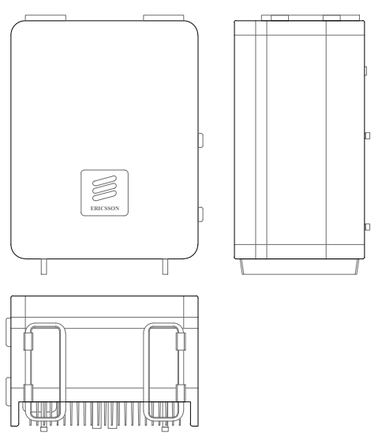

RADIO SPECS	
MANUFACTURER	ERICSSON
MODEL #	4890 B25/B66A
HxWxD	15.12" x 17.48" x 6.93"
WEIGHT	20.83 LBS

4 ERICSSON – 4890 B25/B66A
SCALE: NOT TO SCALE

5 NOT USED
SCALE: NOT TO SCALE

6 NOT USED
SCALE: NOT TO SCALE

verizon

CROWN CASTLE

VERIZON SITE NUMBER:
5000382147

BU #: **812072**

CROWN CASTLE SITE NAME
DXZW

5455 NW 19TH ST.
LAUDERHILL, FL 33313

EXISTING 126'-0"
MONOPOLE

ISSUED FOR:

REV	DATE	DRWN	DESCRIPTION	DES./QA
0	1/15/25	LAW	CONSTRUCTION	MD

Signed by:
Markel Dustinger
01434159068402...

MARKEL DUSTINGER
LICENSE
No. 57890
STATE OF
FLORIDA
PROFESSIONAL ENGINEER

1/21/2025 | 6:45:43 AM CST
1/15/25

CROWN CASTLE USA INC.
PROFESSIONAL ENGINEER LICENSE: #57890
COA #28970

SHEET NUMBER: C-5.2

REVISION: 0

Azimuth (1) Alpha					
Cell (850 CDMA)	Red				
PCS2 (1900 LTE)	Pink	Red	Pink		
700 LTE	Lt. Green	Red	Lt. Green		
850 LTE	Purple	Red	Purple		
2100 LTE	Orange	Red	Orange		
High Band Dual Band (Shared Lines)	Orange	Pink	Red	Pink	Orange
Low Band Dual Band (Shared Lines)	Purple	Lt. Green	Red	Lt. Green	Purple
5G 28GHz	Brown	Red	Brown		
5G 39GHz	Blue	Red	Blue		
LAA	Gray	Red	Gray		
CBRS	White	Red	White		
L-Sub6 (C-Band)	Red	Red	Red		

Azimuth (2) Beta					
Cell (850 CDMA)	Blue				
PCS2 (1900 LTE)	Pink	Blue	Pink		
700 LTE	Lt. Green	Blue	Lt. Green		
850 LTE	Purple	Blue	Purple		
2100 LTE	Orange	Blue	Orange		
High Band Dual Band (Shared Lines)	Orange	Pink	Blue	Pink	Orange
Low Band Dual Band (Shared Lines)	Purple	Lt. Green	Blue	Lt. Green	Purple
5G 28GHz	Brown	Blue	Brown		
5G 39GHz	Blue	Blue	Blue		
LAA	Gray	Blue	Gray		
CBRS	White	Blue	White		
L-Sub6 (C-Band)	Red	Blue	Red		

Azimuth (3) Gamma					
Cell (850 CDMA)	Yellow				
PCS2 (1900 LTE)	Pink	Yellow	Pink		
700 LTE	Lt. Green	Yellow	Lt. Green		
850 LTE	Purple	Yellow	Purple		
2100 LTE	Orange	Yellow	Orange		
High Band Dual Band (Shared Lines)	Orange	Pink	Yellow	Pink	Orange
Low Band Dual Band (Shared Lines)	Purple	Lt. Green	Yellow	Lt. Green	Purple
5G 28GHz	Brown	Yellow	Brown		
5G 39GHz	Blue	Yellow	Blue		
LAA	Gray	Yellow	Gray		
CBRS	White	Yellow	White		
L-Sub6 (C-Band)	Red	Yellow	Red		

Azimuth (4) Delta					
Cell (850 CDMA)	Orange				
PCS2 (1900 LTE)	Pink	Orange	Pink		
700 LTE	Lt. Green	Orange	Lt. Green		
850 LTE	Purple	Orange	Purple		
2100 LTE	Orange	Orange	Orange		
High Band Dual Band (Shared Lines)	Orange	Pink	Orange	Pink	Orange
Low Band Dual Band (Shared Lines)	Purple	Lt. Green	Orange	Lt. Green	Purple
5G 28GHz	Brown	Orange	Brown		
5G 39GHz	Blue	Orange	Blue		
LAA	Gray	Orange	Gray		
CBRS	White	Orange	White		
L-Sub6 (C-Band)	Red	Orange	Red		

Azimuth (5) Epsilon					
Cell (850 CDMA)	White				
PCS2 (1900 LTE)	Pink	White	Pink		
700 LTE	Lt. Green	White	Lt. Green		
850 LTE	Purple	White	Purple		
2100 LTE	Orange	White	Orange		
High Band Dual Band (Shared Lines)	Orange	Pink	White	Pink	Orange
Low Band Dual Band (Shared Lines)	Purple	Lt. Green	White	Lt. Green	Purple
5G 28GHz	Brown	White	Brown		
5G 39GHz	Blue	White	Blue		
LAA	Gray	White	Gray		
CBRS	White	White	White		
L-Sub6 (C-Band)	Red	White	Red		

Azimuth (6) Zeta					
Cell (850 CDMA)	Gray				
PCS2 (1900 LTE)	Pink	Gray	Pink		
700 LTE	Lt. Green	Gray	Lt. Green		
850 LTE	Purple	Gray	Purple		
2100 LTE	Orange	Gray	Orange		
High Band Dual Band (Shared Lines)	Orange	Pink	Gray	Pink	Orange
Low Band Dual Band (Shared Lines)	Purple	Lt. Green	Gray	Lt. Green	Purple
5G 28GHz	Brown	Gray	Brown		
5G 39GHz	Blue	Gray	Blue		
LAA	Gray	Gray	Gray		
CBRS	White	Gray	White		
L-Sub6 (C-Band)	Red	Gray	Red		

1 COLOR CODE MATRIX
SCALE: NOT TO SCALE

verizon

CROWN CASTLE

VERIZON SITE NUMBER:
5000382147

BU #: **812072**

CROWN CASTLE SITE NAME
DXZW

5455 NW 19TH ST.
LAUDERHILL, FL 33313

EXISTING 126'-0"
MONOPOLE

ISSUED FOR:

REV	DATE	DRWN	DESCRIPTION	DES./QA
0	1/15/25	LAW	CONSTRUCTION	MD

Signed by:
Marital Dudinger
01434152465462...

MARITAL DUDINGER
LICENSE
No. 57890
STATE OF
FLORIDA
PROFESSIONAL ENGINEER

1/21/2025 | 6:45:43 AM CST
1/15/25

CROWN CASTLE USA INC.
PROFESSIONAL ENGINEER LICENSE: #57890
COA #28970

SHEET NUMBER: C-6

REVISION: 0

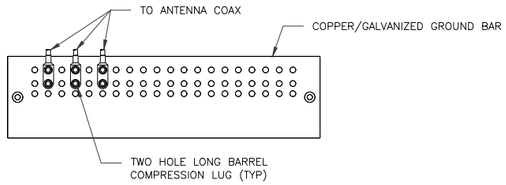

NOTES:

1. DOUBLING UP "OR STACKING" OF CONNECTIONS IS NOT PERMITTED.
2. EXTERIOR ANTIOXIDANT JOINT COMPOUND TO BE USED ON ALL EXTERIOR CONNECTIONS.
3. GROUND BAR SHALL NOT BE ISOLATED FROM TOWER. MOUNT DIRECTLY TO ANTENNA MOUNT STEEL.

1 ANTENNA SECTOR GROUND BAR DETAIL
SCALE: NOT TO SCALE

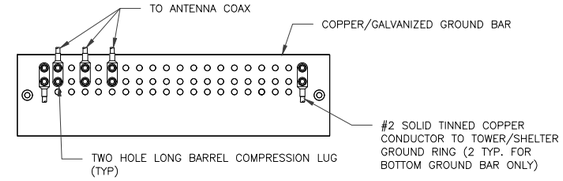

NOTES:

1. EXTERIOR ANTIOXIDANT JOINT COMPOUND TO BE USED ON ALL EXTERIOR CONNECTIONS.
2. GROUND BAR SHALL NOT BE ISOLATED FROM TOWER. MOUNT DIRECTLY TO TOWER STEEL (TOWER ONLY).
3. GROUND BAR SHALL BE ISOLATED FROM BUILDING OR SHELTER.

2 TOWER/SHELTER GROUND BAR DETAIL
SCALE: NOT TO SCALE

WIRE SIZE	BURNDY LUG	BOLT SIZE
#6 GREEN INSULATED	YA6C-2TC38	3/8" – 16 NC SS 2 BOLT
#2 SOLID TINNED	YA3C-2TC38	3/8" – 16 NC SS 2 BOLT
#2 STRANDED	YA2C-2TC38	3/8" – 16 NC SS 2 BOLT
#2/0 STRANDED	YA26-2TC38	3/8" – 16 NC SS 2 BOLT
#4/0 STRANDED	YA28-2N	1/2" – 16 NC SS 2 BOLT

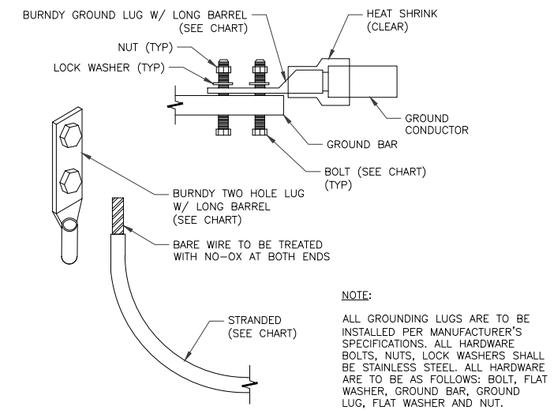

NOTE:

ALL GROUNDING LUGS ARE TO BE INSTALLED PER MANUFACTURER'S SPECIFICATIONS. ALL HARDWARE BOLTS, NUTS, LOCK WASHERS SHALL BE STAINLESS STEEL. ALL HARDWARE ARE TO BE AS FOLLOWS: BOLT, FLAT WASHER, GROUND BAR, GROUND LUG, FLAT WASHER AND NUT.

3 MECHANICAL LUG CONNECTION
SCALE: NOT TO SCALE

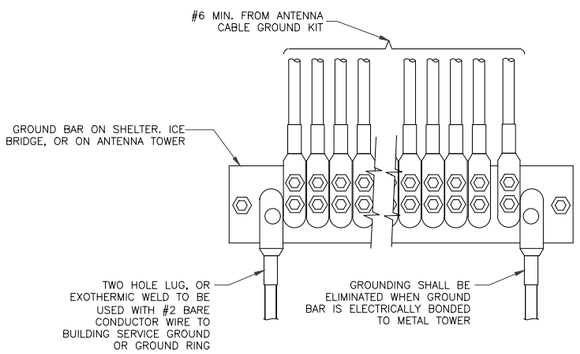

4 GROUNDWIRE INSTALLATION
SCALE: NOT TO SCALE

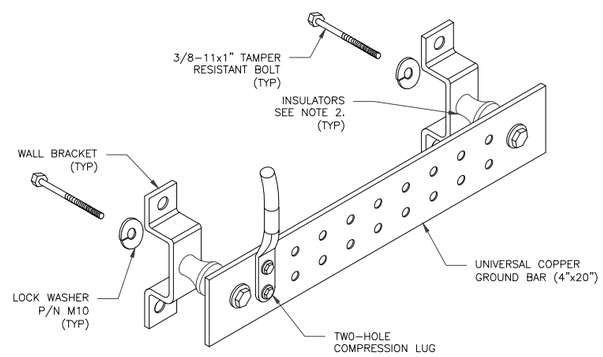

NOTES:

1. DOWN LEAD (HOME RUN) CONDUCTORS ARE NOT TO BE INSTALLED ON CROWN CASTLE USA INC. TOWER, PER THE GROUNDING DOWN CONDUCTOR POLICY QAS-STD-10091. NO MODIFICATION OR DRILLING TO TOWER STEEL IS ALLOWED IN ANY FORM OR FASHION, CAD-WELDING ON THE TOWER AND/OR IN THE AIR ARE NOT PERMITTED.

2. OMIT INSULATOR WHEN MOUNTING TO TOWER STEEL OR PLATFORM STEEL USE INSULATORS WHEN ATTACHING TO BUILDING OR SHELTERS.

5 GROUND BAR DETAIL
SCALE: NOT TO SCALE

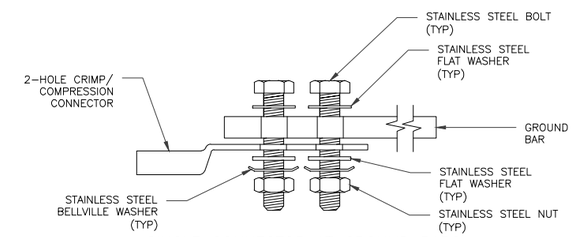

SINGLE CONNECTOR AT GROUND BARS

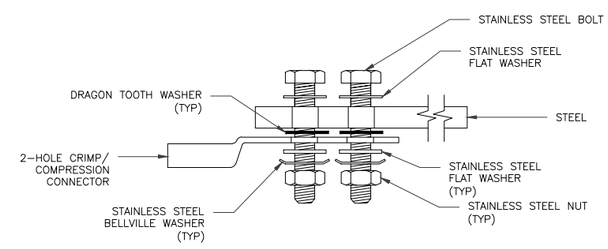

SINGLE CONNECTOR AT STEEL OBJECTS

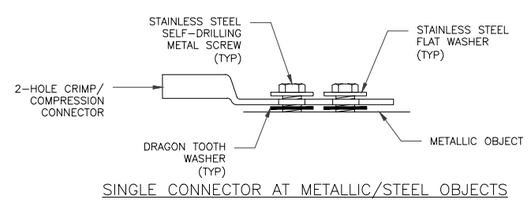

SINGLE CONNECTOR AT METALLIC/STEEL OBJECTS

8 HARDWARE DETAIL FOR EXTERIOR CONNECTIONS
SCALE: NOT TO SCALE

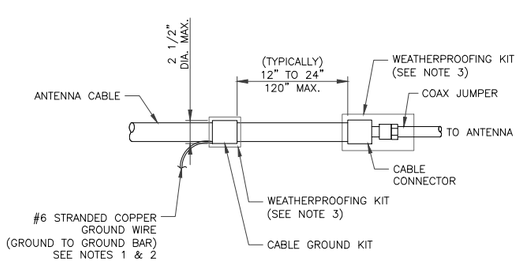

NOTES:

1. DO NOT INSTALL CABLE GROUND KIT AT A BEND AND ALWAYS DIRECT GROUND WIRE DOWN TO GROUND BAR.
2. GROUNDING KIT SHALL BE TYPE AND PART NUMBER AS SUPPLIED OR RECOMMENDED BY CABLE MANUFACTURER.
3. WEATHER PROOFING SHALL BE TWO-PART TAPE KIT, COLD SHRINK SHALL NOT BE USED.

6 CABLE GROUND KIT CONNECTION
SCALE: NOT TO SCALE

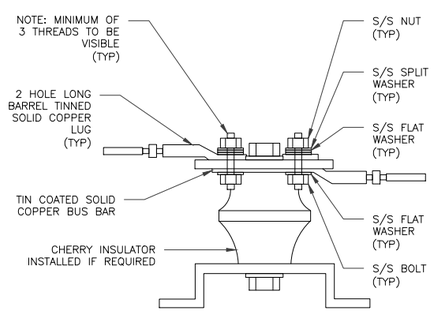

7 LUG DETAIL
SCALE: NOT TO SCALE

verizon

CROWN CASTLE

VERIZON SITE NUMBER:
5000382147

BU #: **812072**

CROWN CASTLE SITE NAME
DXZW

5455 NW 19TH ST.
LAUDERHILL, FL 33313

EXISTING 126'-0"
MONOPOLE

ISSUED FOR:

REV	DATE	DRWN	DESCRIPTION	DES./QA
0	1/15/25	LAW	CONSTRUCTION	MD

Signed by:
Martel Dudinger
01484153468482...

MARTEL DUDINGER
LICENSE
No. 57890
STATE OF
FLORIDA
PROFESSIONAL ENGINEER

1/21/2025 | 6:45:43 AM CST
1/15/25

CROWN CASTLE USA INC.
PROFESSIONAL ENGINEER LICENSE: #57890
COA #28970

SHEET NUMBER: G-1

REVISION: 0

verizon NPP RFDS

SOUTH > South East > Florida > Miami > BELLSOUTH LAUDERHILL

Castaneda, Jorge - jorge.castaneda2@verizonwireless.com - 20240722_101138

Project Details		Location Information	
Carrier Aggregation	N	Site Id	668650
Ecip	N	Search Ring#	
Project Name	SECTOR ADD	E-NodeB ID#	148046|748046|1487046|1489046
Project Alt Name	SECTOR ADD	PSLC#	131681
Project Id	17332603	Switch Name	Miami
Designed Sector Carrier 4G	17	Tower Type	
Designed Sector Carrier 5G	8	Site Type	MACRO
Additional Sector Carrier 4G	0	Street Address	2000 CITY HALL DRIVE
Additional Sector Carrier 5G	0	City	Lauderhill
Suffix		State	FL
FP Solution Type & Tech Type	MODIFICATION;4G_Sector-Add-L-Sub6; 4G_Sector-Add-Sub1;4G_Sector-Add-Sub3	Zip Code	33313
		County	Broward
		Latitude	26.152667/ 26° 9' 9.601"
		Longitude	-80.220028/ 80° 13' 12.101"

Project Scope

Antenna Summary

Added Antenna

700	1900	AWS	CBRS	L-Sub6	Make	Model	Centerline	Tip Height	Azimuth	Install Type	Quantity
	5G,LTE	LTE			Ericsson	AIR3283	110	112	120(4),240(5)	PHYSICAL	2
				5G	Ericsson	AIR6419	110	111.2	0(1),120(2),240(3)	PHYSICAL	3
LTE	5G,LTE	LTE			MATSING	MS-MBA-3.2-H8-L4	110	114	340(1),340(2),340(3)	PHYSICAL	1
LTE					CommScope	NHH-65B-HG-R2B	110	113	120(3),240(4)	PHYSICAL	4

Removed Antenna

700	1900	AWS	CBRS	L-Sub6	Make	Model	Centerline	Tip Height	Azimuth	Install Type	Quantity
				5G	Ericsson	AIR6449	110	111.3	0(1),120(2),240(3)	PHYSICAL	3
LTE	5G,LTE	LTE			CSS ANTENNA,JMA	X7CQAP-665-VR0	110	113	0(1),120(2),240(3)	PHYSICAL	6

Retained Antenna

700	1900	AWS	CBRS	L-Sub6	Make	Model	Centerline	Tip Height	Azimuth	Install Type	Quantity
			LTE		ERICSSON	KRE105281/1	110	110.3	0(1),120(4),240(7)	PHYSICAL	3

Added: 10	Removed: 9	Retained: 3

Non Antenna Summary

Added Non Antenna

Equipment Type	Location	700	1900	AWS	CBRS	Make	Model	Install Type	Quantity
RRU	Tower	LTE				Ericsson	4490	PHYSICAL	4
RRU	Tower		5G,LTE	LTE		Ericsson	4890	PHYSICAL	3

Removed Non Antenna

Equipment Type	Location	700	1900	AWS	CBRS	Make	Model	Install Type	Quantity
RRU	Tower	LTE				Ericsson	4449	PHYSICAL	3
RRU	Tower		5G,LTE	LTE		Ericsson	8843	PHYSICAL	3

Retained Non Antenna

Equipment Type	Location	700	1900	AWS	CBRS	Make	Model	Install Type	Quantity
Coaxial Cables	Tower					Andrew	1 5/8"	LEASE	6
Hybrid Cable	Tower					Ericsson	1-5/8 (12x24) Hybrid Cable	PHYSICAL	2
OVP	Tower					ovp	12 OVP	PHYSICAL	2
RRU	Tower				LTE	Ericsson	4408 B48 DC	PHYSICAL	3

Added: 7	Removed: 6	Retained: 13

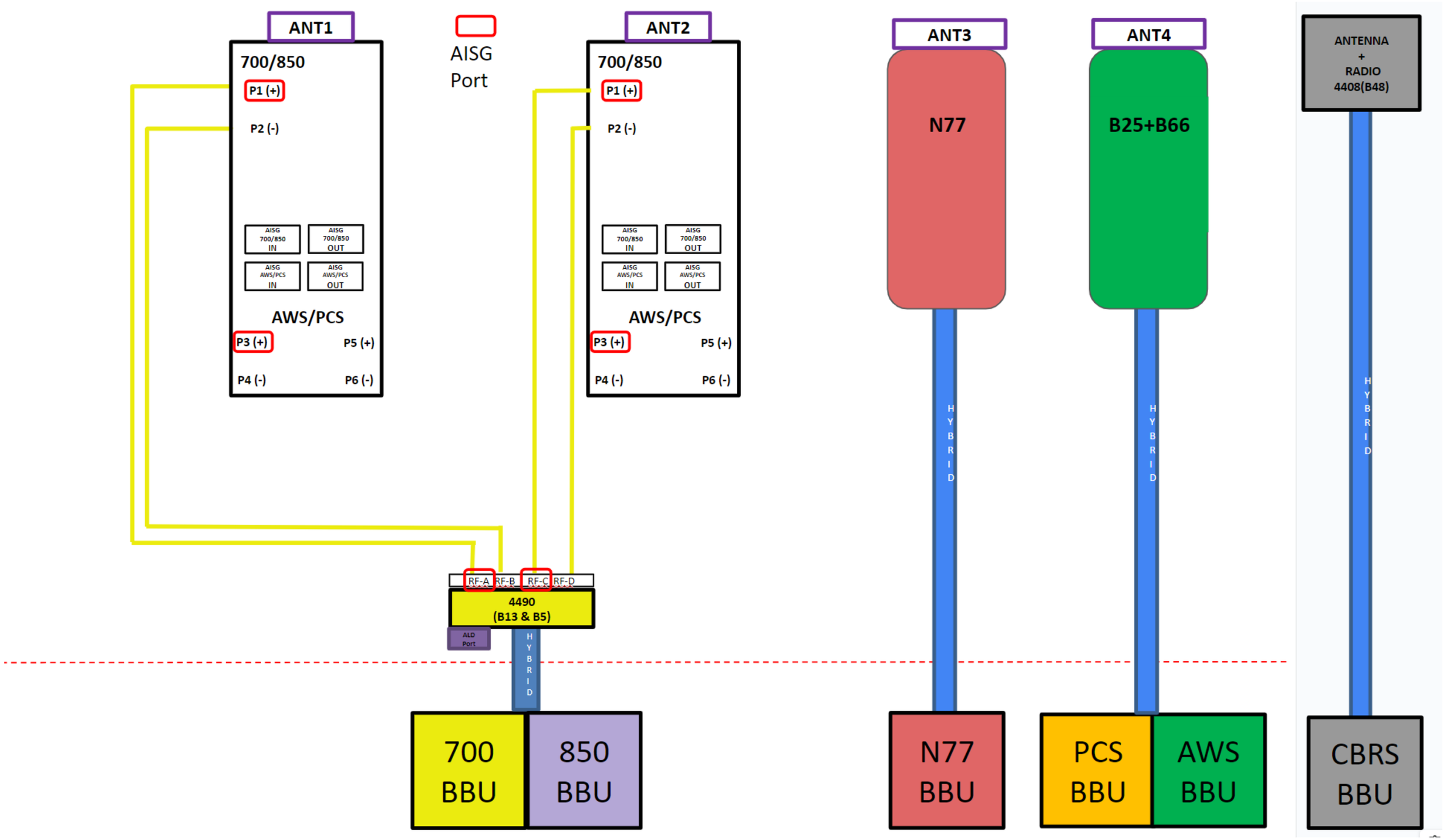
ANT1
700/850
P1 (+)
P2 (-)
AISG 700/850 IN
AISG 700/850 OUT
AISG AWS/PCS IN
AISG AWS/PCS OUT
AWS/PCS
P3 (+)
P5 (+)
P4 (-)
P6 (-)
AISG Port
ANT2
700/850
P1 (+)
P2 (-)
AISG 700/850 IN
AISG 700/850 OUT
AISG AWS/PCS IN
AISG AWS/PCS OUT
AWS/PCS
P3 (+)
P5 (+)
P4 (-)
P6 (-)
ANT3
N77
ANT4
B25+B66
ANTENNA + RADIO 4408(B48)
RF-A
RF-B
RF-C
RF-D
4490 (B13 & B5)
ALD Port
HYBRID
700 BBU
850 BBU
N77 BBU
PCS BBU
AWS BBU
CBRS BBU

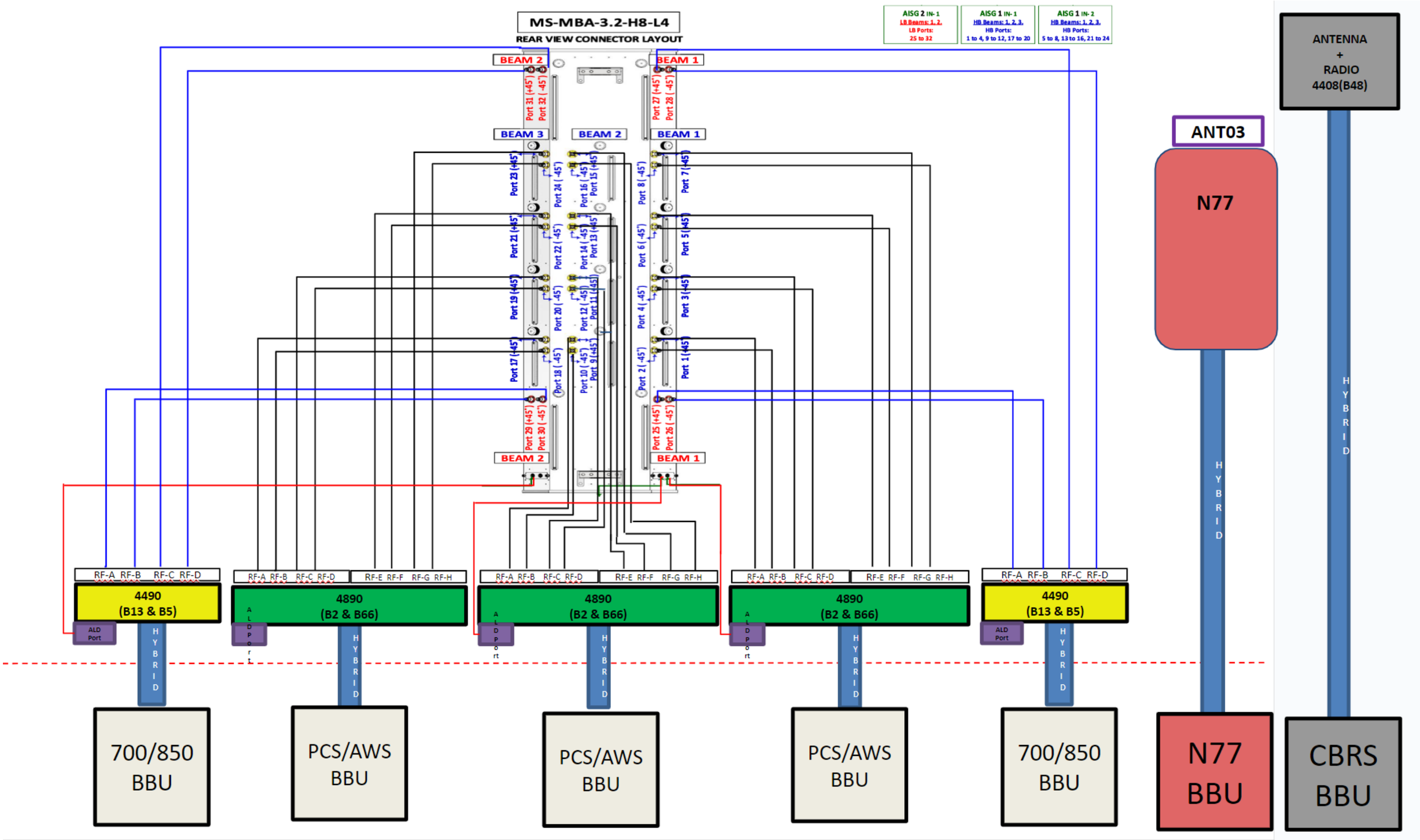
MS-MBA-3.2-H8-L4
REAR VIEW CONNECTOR LAYOUT
AISG 2 IN- 1
LB Beams: 1, 2.
LB Ports:
25 to 32
AISG 1 IN- 1
HB Beams: 1, 2, 3.
HB Ports:
1 to 4, 9 to 12, 17 to 20
AISG 1 IN- 2
HB Beams: 1, 2, 3.
HB Ports:
5 to 8, 13 to 16, 21 to 24
BEAM 2
BEAM 1
BEAM 3
BEAM 2
BEAM 1
BEAM 2
BEAM 1
ANTENNA
+
RADIO
4408(B48)
ANT03
N77
HYBRID
HYBRID
RF-A RF-B RF-C RF-D
4490
(B13 & B5)
ALD Port
RF-A RF-B RF-C RF-D
RF-E RF-F RF-G RF-H
4890
(B2 & B66)
ALD Port
RF-A RF-B RF-C RF-D
RF-E RF-F RF-G RF-H
4890
(B2 & B66)
ALD Port
RF-A RF-B RF-C RF-D
RF-E RF-F RF-G RF-H
4890
(B2 & B66)
ALD Port
RF-A RF-B RF-C RF-D
4490
(B13 & B5)
ALD Port
HYBRID
700/850
BBU
PCS/AWS
BBU
PCS/AWS
BBU
PCS/AWS
BBU
700/850
BBU
N77
BBU
CBRS
BBU

Colliers Engineering & Design
5141 Virginia Way, Suite 420
Brentwood, TN 37027
615.686.2575
ashley.sustek@collierseng.com

Antenna Mount Analysis Report with Hardware Upgrades and PMI Requirements

Mount ReAnalysis

SMART Tool Project #: 10247406
Colliers Engineering & Design Project #: 24944166

August 13, 2024

Site Information	*Site ID:*	*5000382147-VZW / Crown BS Lauderhill*
	Site Name:	*Crown BS Lauderhill*
	Carrier Name:	*Verizon Wireless*
	Address:	*2000 City Hall Drive* *Lauderhill, Florida 33313* *Broward County*
	Latitude:	*26.152667°*
	Longitude:	*-80.220028°*
Structure Information	*Tower Type:*	*125-Ft Monopole*
	Mount Type:	*12.50-Ft Platform*

FUZE ID # 17332603

Analysis Results

Platform: **85.7% Pass w/ Hardware Upgrades***

*** Antennas and equipment to be installed in compliance with PMI Requirements of this mount analysis.**

******Contractor PMI Requirements*:**
Included at the end of this MA report
Available & Submitted via portal at https://pmi.vzwsmart.com
For additional questions and support, please reach out to:
pmisupport@colliersengineering.com

Report Prepared By: David Anuka

DEJIAN XU LICENSE No. 90444 STATE OF FLORIDA PROFESSIONAL ENGINEER

Dejian Xu

Digitally signed by Dejian Xu
Date: 2024.08.13 13:21:29-04'00'

Executive Summary:

The objective of this report is to determine the capacity of the antenna support mount at the subject facility for the final wireless telecommunications configuration, per the applicable codes and standards. Any modification listed under Sources of Information was assumed completed and was included in this analysis.

This analysis is inclusive of the mount structure only and does not address the structural capacity of the supporting structure. This mounting frame was not analyzed as an anchor attachment point for fall protection. All climbing activities are required to have a fall protection plan completed by a competent person.

Sources of Information:

Document Type	Remarks
Mount Drawing	*Verizon RFDS Site ID: 668650, dated July 22, 2024*
Post Modification Inspection	*Colliers Engineering & Design, Project #: 21942141, dated January 26, 2023*
Mount Mapping	*Tower Engineering Professionals Site ID: 131681, dated January 25, 2021*

Analysis Criteria:

Codes and Standards:	ANSI/TIA-222-H	
Wind Parameters:	Basic Wind Speed (Ultimate 3-sec. Gust), V_{ULT}:	170 mph
	Ice Wind Speed (3-sec. Gust):	30 mph
	Design Ice Thickness:	0.00 in
	Risk Category:	II
	Exposure Category:	C
	Topographic Category:	1
	Topographic Feature Considered:	N/A
	Topographic Method:	N/A
	Ground Elevation Factor, K_e:	1.000
Seismic Parameters:	S_S:	0.044 g
	S_1:	0.022 g
Maintenance Parameters:	Wind Speed (3-sec. Gust):	30 mph
	Maintenance Load, Lv:	250 lbs.
	Maintenance Load, Lm:	500 lbs.
Analysis Software:	RISA-3D (V17)	

Final Loading Configuration:

The following equipment has been considered for the analysis of the mount:

Mount Elevation (ft)	Equipment Elevation (ft)	Quantity	Manufacturer	Model	Status
109.00	110.00	3	Ericsson	KRE105281/1	Retained
		1	Raycap	RHSDC-6627-PF-48	
		1	Raycap	RCMDC-6627-PF-48	
		3	-	Bias-T	
		1	Radio Waves	SP2 - 5.2NS	
		1	MatSing	MS-MBA-3.2-H8-L4	Added
		4	Commscope	NHH-65B-HG-R2B	
		3	Ericsson	AIR 6419	
		2	Ericsson	AIR 3283	
		4	Ericsson	4490	
		3	Ericsson	4890	

It is acceptable to install up to any three (3) of the OVP model numbers listed below as required at any location other than the mount face without affecting the structural capacity of the mount. If OVP units are installed on the mount face, a mount re-analysis may be required unless replacing an existing OVP.

Model Number	Ports	AKA
RC3DC-3315-PF-48	6	OVP-6
RHSDC-6627-PF-48	12	OVP-12

Standard Conditions:

1. All engineering services are performed on the basis that the information provided to Colliers Engineering & Design and used in this analysis is current and correct. The existing equipment loading has been applied at locations determined from the supplied documentation. Any deviation from the loading locations specified in this report shall be communicated to Colliers Engineering & Design to verify deviation will not adversely impact the analysis.

2. Mounts are assumed to have been properly fabricated, installed and maintained in good condition, twist free and plumb in accordance with its original design and manufacturer's specifications.

   Obvious safety and structural issues/deficiencies noticed at the time of the mount mapping and reported in the Mount Mapping Report are assumed to be corrected and documented as part of the PMI process and are not considered in the mount analysis.

   The mount analysis and the mount mapping are not a condition assessment of the mount. Proper maintenance and condition assessments are still required post analysis.

3. For mount analyses completed from other data sources (including new replacement mounts) and not specifically mapped in accordance with the NSTD-446 Standard, the mounts are assumed to have been properly fabricated, installed and maintained in good condition, twist free and plumb in accordance with its original design and manufacturer's specifications.

4. All member connections are assumed to have been designed to meet or exceed the load carrying capacity of the connected member unless otherwise specified in this report.

5. The mount was checked up to, and including, the bolts that fasten it to the mount collar/attachment and threaded rod connections in collar members if applicable. Local deformation and interaction between the mount collar/attachment and the supporting tower structure are outside the scope of this analysis.

6. All services are performed, results obtained, and recommendations made in accordance with generally accepted engineering principles and practices. Colliers Engineering & Design is not responsible for the conclusion, opinions, and recommendations made by others based on the information supplied.

7. Structural Steel Grades have been assumed as follows, if applicable, unless otherwise noted in this analysis:
   - Channel, Solid Round, Angle, Plate — ASTM A36 (Gr. 36)
   - HSS (Rectangular) — ASTM 500 (Gr. B-46)
   - Pipe — ASTM A53 (Gr. B-35)
   - Threaded Rod — F1554 (Gr. 36)
   - Bolts — ASTM A325

Discrepancies between in-field conditions and the assumptions listed above may render this analysis invalid unless explicitly approved by Colliers Engineering & Design.

Analysis Results:

Component	Utilization %	Pass/Fail
Face Horizontal	33.6 %	Pass
Standoff Horizontal	39.8 %	Pass
Platform Crossmember	16.9 %	Pass
Proposed P 2 1/2 Pipe	68.2 %	Pass
Corner Plate	45.9 %	Pass
Grating Support	38.4 %	Pass
Cross Arm Plate	77.1 %	Pass
Mount Pipe	70.6 %	Pass
Mod Support Rail	49.8 %	Pass
Support Rail Corner	64.3 %	Pass
Mod Kicker	9.2 %	Pass
Pipe to Pipe	85.7 %	Pass
Connection Check	59.8 %	Pass

Structure Rating – *(Controlling Utilization of all Components)*	**85.7%***

***** Results valid after hardware upgrades noted in the PMI Requirements are installed.

Mount Connection Envelope Reactions:

Connection Description	Elev. AGL (Ft)	Node Label	Envelope Wind Reactions				Envelope Wind + Ice Reactions			
			Axial (Lbs)	Lateral (Lbs)	Moment (K-Ft)	Torsion (K-Ft)	Axial (Lbs)	Lateral (Lbs)	Moment (K-Ft)	Torsion (K-Ft)
Sector C Standoff	109	N3	563	8601	0.766	2.906	256	1549	0.303	0.161
Sector B Standoff	109	N46	318	7510	0.514	2.744	232	1460	0.263	0.084
Sector A Standoff	109	N74	465	9053	0.330	6.076	215	2235	0.240	0.249
Sector C Reinforcement	106.5	N168A	2016	3153	0.000	0.000	958	1498	0.000	0.000
Sector B Reinforcement	106.5	N169A	1794	2796	0.000	0.000	881	1374	0.000	0.000
Sector A Reinforcement	106.5	N170	2335	3664	0.002	0.001	1388	2187	0.000	0.000

Notes:
- Axial loads act along the axis of the tower
- Lateral reactions act perpendicular to the tower
- Moment loads introduce bending moment to the tower
- Torsion loads introduce twisting moment to the tower
- Batch solutions by individual load cases are included at the end of this document

Mount Steel (EPA)a per ANSI/TIA-222-H Section 2.6.11.2:

Ice Thickness (In)	Mount Pipes Excluded		Mount Pipes Included	
	Front (EPA)a (Sq. Ft.)	Side (EPA)a (Sq. Ft.)	Front (EPA)a (Sq. Ft.)	Side (EPA)a (Sq. Ft.)
0	27.7	27.4	42.9	42.6
0.5	39.7	40.1	61.6	61.2
1	47.9	48.5	76.4	75.8

Notes:
- (EPA)a values listed above may be used in the absence of more precise information
- (EPA)a values in the table above include 3 sector(s).
- Ka factors included in (EPA)a calculations

Requirements:

The existing mount will be **SUFFICIENT** for the final loading configuration shown in attachment 2 upon the completion of the requirements listed below.

Refer to document at the end of this form for special instructions. Contact EOR if special instructions are not available.

ANSI/ASSP rigging plan review services compliant with the requirements of ANSI/TIA 322 are available for a Construction Class IV site or other, if required. Separate review fees will apply.

Attachments:

1. **Contractor Required Post Installation Inspection (PMI) Report Deliverables**
2. Antenna Placement Diagrams
3. Mount Photos
4. Mount Mapping Report (for reference only)
5. Analysis Calculations

Mount Desktop – Post Modification Inspection (PMI) Report Requirements

Documents & Photos Required from Contractor – Passing Mount Analysis

Passing Mount Analysis requires a PMI due to a modification in loading.

Electronic pdf version of this can be downloaded at https://pmi.vzwsmart.com.

For additional questions and support, please reach out to pmisupport@colliersengineering.com

---

MDG #: 5000382147 SMART Project #: 10247406 Fuze Project ID: 17332603

Purpose – to provide SMART Tool structural vendor the proper documentation in order to complete the required Mount Desktop review of the Post Modification Inspection Report.

- Contractor is responsible for making certain the photos provided as noted below provide confirmation that the installation was completed in accordance with this Passing Mount Analysis.
- Contractor shall relay any data that can impact the performance of the mount, this includes safety issues.

Base Requirements:

- If installation will cause damage to the structure, the climbing facility, or safety climb if present or any installed system, SMART Tool vendor to be notified prior to install. Any special photos outside of the standard requirements will be indicated on the drawings.
- Provide "as built mount drawings" showing contractor's name, contact information, preparer's signature, and date. Any deviations from the drawings (Proposed modification) shall be shown. NOTE: If loading is different than what is conveyed in the passing mount analysis (MA) contact the SMART Tool vendor immediately.
- Each photo should be time and date stamped
- Photos should be high resolution.
- Contractor shall ensure that the safety climb wire rope is supported and not adversely impacted by the install of the modification components. This may involve the install of wire rope guides, or other items to protect the wire rope. If there is conflict, contact the SMART Tool engineer for recommendations.
- The PMI can be accessed at the following portal: ***https://pmi.vzwsmart.com***

Photo Requirements:

- *Photos taken at ground level*
  - Photo of Gate Signs showing the tower owner, site name, and number.
  - Overall tower structure after installation.
  - Photos of the mount after installation; if the mounts are at different rad elevations, pictures must be provided for all elevations that equipment was installed.
- *Photos taken at Mount Elevation*
  - Photos showing the safety climb wire rope above and below the mount prior to installation.
  - Photos showing the climbing facility and safety climb if present.
  - Photos showing each individual sector after installation. Each entire sector shall be in one photo to show the interconnection of members.

        - These photos shall also certify that the placement and geometry of the equipment on the mount is as depicted in the antenna placement diagram in this form.
    - Photos that show the model number of each antenna and piece of equipment installed per sector.

Antenna & equipment placement and Geometry Confirmation:

- The contractor shall certify that the antenna & equipment placement and geometry is in accordance with the sketch and table as included in the mount analysis and noted below.

☐ The contractor certifies that the photos support and the equipment on the mount is as depicted on the sketch and table included in this form and with the mount analysis provided.

OR

☐ The contractor notes that the equipment on the mount is not in accordance with the sketch and has noted the differences below and provided photo documentation of any alterations.

Special Instructions / Validation as required from the MA or any other information the contractor deems necessary to share that was identified:

Issue:

Refer to document at the end of this form for special instructions. Contact EOR if special instructions are not available.

Response:

Special Instruction Confirmation:

☐ The contractor has read and acknowledges the above special instructions.

☐ All hardware listed in the Special Instructions above (if applicable) has been properly installed, and the existing hardware was inspected.

☐ The material utilized was as specified in the SMART Tool engineering vendor Special Instructions above (if applicable) and included in the material certification folder is a packing list or invoice for these materials.

OR

☐ The material utilized was approved by a SMART Tool engineering vendor as an “equivalent” and this approval is included as part of the contractor submission.

Comments:

Contractor certifies that the climbing facility / safety climb was not damaged prior to starting work:

☐ Yes ☐ No

Contractor certifies no new damage created during the current installation:

☐ Yes ☐ No

Contractor to certify the condition of the safety climb and verify no damage when leaving the site:

☐ Safety Climb in Good Condition ☐ Safety Climb Damaged

Contractor to provide measurement from top of the highest equipment/steel to the bottom of the lowest equipment/steel by documenting it using the most appropriate illustration below along with supporting photos:

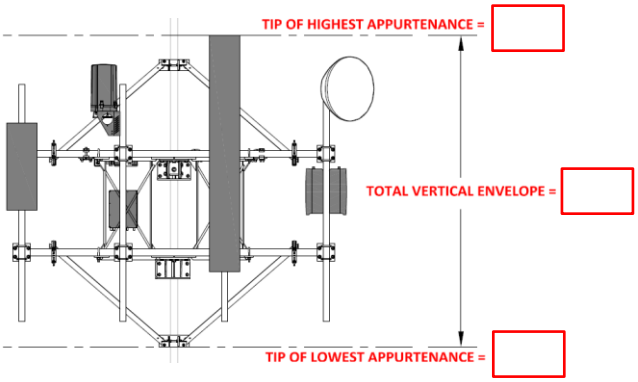

Illustration #1

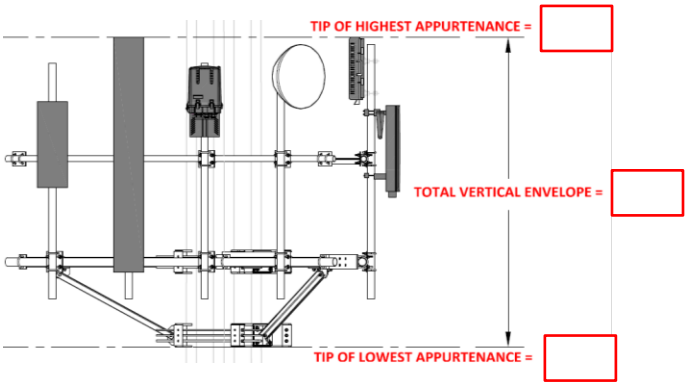

Illustration #2

Certifying Individual:

Company:	
Employee Name:	
Contact Phone:	
Email:	
Date:	

MDG #: 5000382147
Site Name: BELLSOUTH LAUDERHILL
Fuze ID #: 17332603
Colliers Engineering & Design Project #: 24944166

PMI INSTRUCTIONS:

Contractor shall inspect climbing facilities and safety climb and ensure they are in good condition. Contractor shall install safety climb wire rope guides in locations where wire rope is rubbing against the mount or mount-to-tower connection steel. Wire brush clean any observed corrosion and protect with two (2) coats of cold galvanization (Zinga or Zinc Kote). Contractor shall provide photos of wire rope guide installation as part of PMI documents. Contact EOR if additional guidance is required.

Contractor shall install the proposed 4490 & 4890 units on new Rosenberger D215RRU/D218RRUDSM (or VZW Approved Equivalent) RRU mounting kits in the location shown in the placement diagrams.

Alpha Sector:

Contractor shall replace existing position 1 mount pipe with new 84” long P2.5 SCH40 pipe. Install in same location as the to be removed pipe. Top of pipe shall be 21” above support rail. Attach using VZWSMART MSK2 crossover plates to the face horizontal & VZWSMART MSK1 to the support rail. Contractor shall install a new 96” long P2 SCH40 mount pipe connected to the replaced mount pipe. Top of pipe shall be 12” above the replaced mount pipe. Connect new P2 pipe to P2.5 pipe with pipe to pipe connections (Perfect Vision Part #: PV-DC-PTPC-2025-12). Contractor shall install pipe-to-pipe clamps 24” from top of P2 pipe and 12” from top of P2.5 pipe. Install the 2nd set of pipe-to-pipe clamps at 46” from the 1st set. Refer to placement diagrams.

Beta Sector:

Contractor shall install a new 84” long P2 SCH40 mount pipe position 3. Install 30” from position 2 pipe. Top of pipe shall be 21” above the support rail. Attach using VZWSMART MSK2 crossover plates to the face horizontal & VZWSMART MSK1 to the support rail. Refer to placement diagrams.

Gamma Sector:

Contractor shall install a new 84” long P2 SCH40 mount pipe position 4. Install 30” from position 3 pipe. Top of pipe shall be 21” above the support rail. Attach using VZWSMART MSK2 crossover plates to the face horizontal & VZWSMART MSK1 to the support rail. Refer to placement diagrams.

Contractor shall install a new 84” long P2 SCH40 mount pipe position 2. Install 30” from position 3 pipe. Top of pipe shall be 21” above the support rail. Attach using VZWSMART MSK2 crossover plates to the face horizontal & VZWSMART MSK1 to the support rail. Refer to placement diagrams.